PROPERTY OF
Electro Rent
Corporation

operating and service manual

for satellite communications terminal equipment

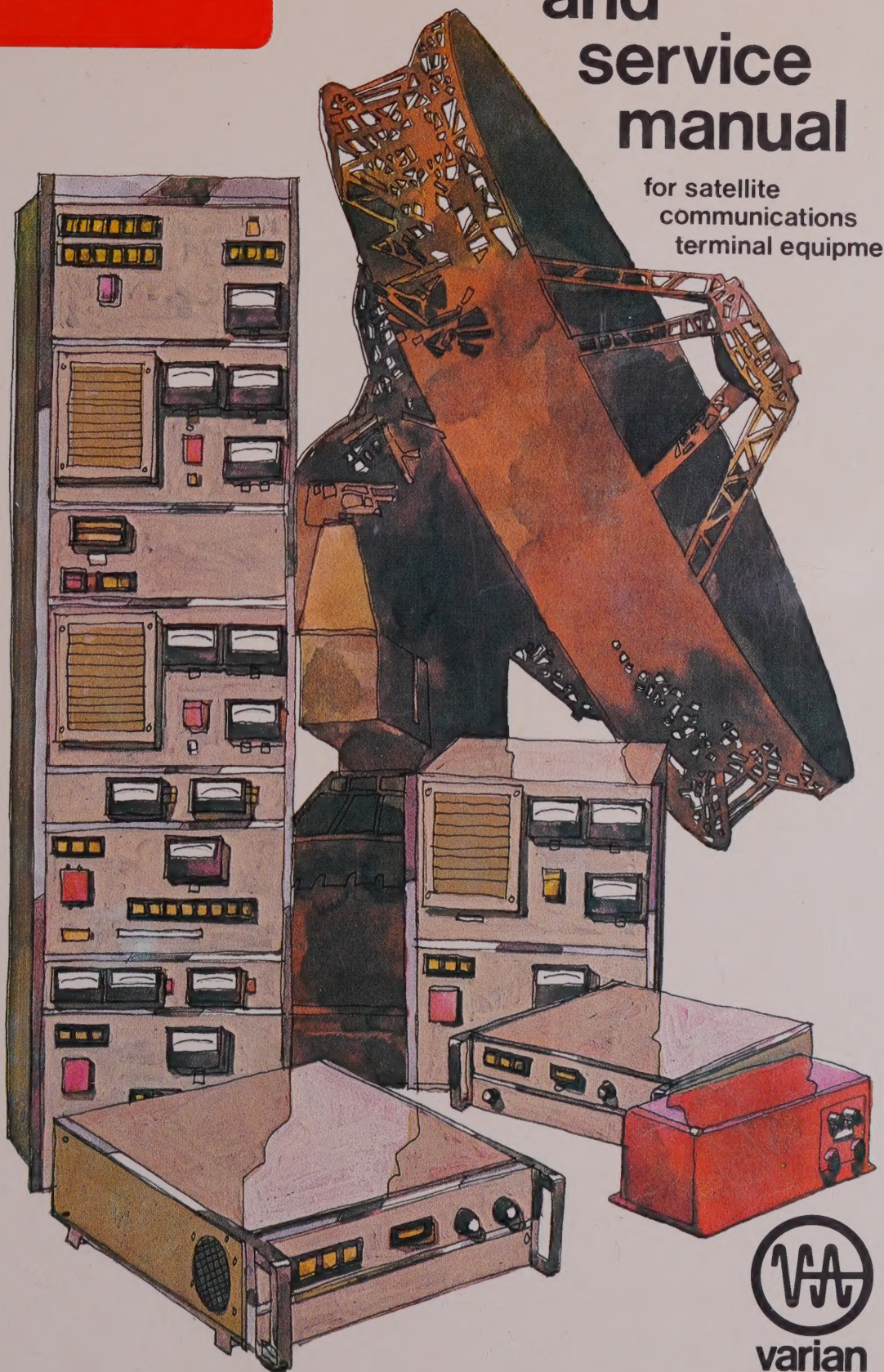

varian

Printed in U.S.A.

CC ..ETED
JUN 15 1989

OPERATING AND SERVICE MANUAL
FOR
CW MEDIUM POWER AMPLIFIERS

"K" SERIES

PROPRIETARY

THE DESIGN AND OTHER INFORMATION CONTAINED IN THIS DOCUMENT ARE PROVIDED SOLEY FOR THE PURPOSES OF OPERATING AND MAINTAINING VARIAN EQUIPMENT. EXCEPT FOR RIGHTS EXPRESSLY GRANTED BY CONTRACT, ALL SUCH INFORMATION IS THE EXCLUSIVE PROPERTY OF VARIAN ASSOCIATES, INC. THIS DOCUMENT MAY NOT BE DUPLICATED, IN WHOLE OR IN PART, OR BE USED FOR MANUFACTURE WITHOUT WRITTEN PERMISSION OF VARIAN ASSOCIATES, INC.

VARIAN ASSOCIATES

MICROWAVE EQUIPMENT DIVISION

3200 PATRICK HENRY DRIVE

SANTA CLARA, CALIFORNIA 95054

1026-1/85

P/N 01004147-30

Digitized by the Internet Archive
in 2024

https://archive.org/details/manualsplus_02003

WARNING

HIGH VOLTAGE

DO NOT ATTEMPT TO REPAIR OR TROUBLESHOOT THIS UNIT UNLESS YOU ARE THOROUGHLY FAMILIAR WITH ITS OPERATION AND ARE EXPERIENCED IN SERVICING HIGH VOLTAGE EQUIPMENT. LETHAL VOLTAGES ARE PRESENT WHEN POWER IS APPLIED TO THE SYSTEM. BE EXTREMELY CAREFUL WHEN WORKING INSIDE THE UNIT. USE ONLY ONE HAND TO MAKE ANY MEASUREMENTS OR ADJUSTMENTS. IF POSSIBLE, TURN POWER OFF BEFORE MAKING ADJUSTMENTS.

RADIO FREQUENCY RADIATION HAZARD

MICROWAVE AMPLIFIERS AND TUBES GENERATE HAZARDOUS RADIO FREQUENCY RADIATION WHICH CAN RESULT IN SEVERE BODILY INJURY INCLUDING CATARACTS, PRODUCING BLINDNESS. SOME CARDIAC PACEMAKERS MAY BE AFFECTED BY THE RF ENERGY EMITTED BY MICROWAVE AMPLIFIERS.

NEVER OPERATE A MICROWAVE TUBE WITHOUT A PROPERLY MATCHED RF ENERGY ABSORBING LOAD ATTACHED. ENSURE THAT PERSONNEL ARE NEVER PERMITTED NEAR ENERGIZED OPEN WAVEGUIDES OR ANTENNAS. IT IS PARTICULARILY IMPORTANT TO NEVER LOOK INTO AN OPEN WAVEGUIDE OR ENERGIZED ANTENNA. MONITOR ALL PARTS OF THE RF SYSTEM FOR RF RADIATION LEAKAGE BEFORE AND AFTER ALL SERVICE WORK AND AT REGULAR INTERVALS.

"K" SERIES

MODEL NUMBER

RECORD OF CHANGES

CHANGE NO.	DATE	TITLE OR BRIEF DESCRIPTION	ENTERED BY
A	2/4/85	RE-EDIT FOR SECOND PRINTING	CET
B	4/23/87	RE-EDIT FOR THIRD PRINTING	ACD

TABLE OF CONTENTS

TOPIC			PAGE NO.
SECTION 1 -	INTRODUCTION		1-1
1.1	GENERAL		1-1
1.2	TWTs AND OPTIONS AVAILABLE		1-1
	1.2.1	TWTs Available	1-1
	1.2.2	Standard Options Available	1-1
	1.2.3	Non-Standard Options (Special Features	1-4
1.3	MODEL NUMBER INTERPRETATION		1-4
1.4	SPECIFICATIONS		1-4
1.5	GENERAL DESCRIPTION		1-8
	1.5.1	Control/Indicator Assembly	1-8
	1.5.2	Main Chassis Assembly	1-9
	1.5.2.1	Prime Power Interface Circuits	1-9
	1.5.3	Power Processor PCB	1-9
	1.5.4	High Voltage Assembly	1-9
	1.5.5	RF Components	1-10
	1.5.6	Other Components	1-10
SECTION 2 -	UNPACKING AND INSTALLATION		2-1
2.1	UNPACKING AND INSPECTION		2-1
	2.1.1	Pre-Inspection	2-1
	2.1.2	Unpacking	2-1
	2.1.3	Check Packing Slips	2-1
	2.1.4	Post Unpacking Inspection	2-1
	2.1.5	Pre-installation Electrical Inspection	2-2
2.2	MECHANICAL INSTALLATION		2-2
	2.2.1	Rack Installation (Optional)	2-2
	2.2.2	RF Connections	2-3
	2.2.3	Cooling	2-3
2.3	ELECTRICAL INTERCONNECTION		2-4
	2.3.1	AC Prime Power	2-4
	2.3.2	Grounding	2-4
	2.3.3	External Connections	2-4

TABLE OF CONTENTS (Continuation)

	TOPIC		PAGE NO.
2.4	REPACKAGING FOR SHIPMENT		2-6
	2.4.1	Shipping Container	2-6
	2.4.2	Sealing Container	2-6
	2.4.3	Marking	2-6
SECTION 3 -	OPERATION		3-1
3.1	GENERAL		3-1
3.2	OPERATING MODES		3-1
	3.2.1	Filament Time Delay	3-1
	3.2.2	Standby	3-2
	3.2.3	Operate	3-2
	3.2.4	Fault	3-3
3.3	METERS, CONTROLS AND INDICATORS		3-3
3.4	INITIAL TURN-ON		3-3
	3.4.1	Pre-Power Check	3-6
	3.4.2	Turn-On Sequence	3-7
3.5	NORMAL TURN-ON		3-8
3.6	TURN-OFF		3-9
SECTION 4 -	THEORY OF OPERATION		4-1
4.1	GENERAL		4-1
4.2	FUNCTIONAL DESCRIPTION		4-2
	4.2.1	Power Supply Functions	4-2
	4.2.2	RF Section Functions	4-5
4.3	DETAILED DISCUSSION OF POWER SUPPLY SECTION		4-6
	4.3.1	Prime Power Interface	4-6
	4.3.1.1	Standard Configuration	4-6
	4.3.1.2	Optional Programmable 115 VAC/ 230 VAC Operation	4-6
	4.3.1.3	Fusing	4-6
	4.3.1.4	Outputs	4-8
	4.3.2	Power Processor PCB Assembly (A2)	4-8
	4.3.2.1	Function of Power Processor PCB	4-8
	4.3.2.2	Turn-On Current Limiting	4-10

TABLE OF CONTENTS (Continuation)

TOPIC			PAGE NO.
	4.3.2.3	Bus Rectifier	4-20
	4.3.2.4	Switch Regulator	4-20
	4.3.2.5	High Voltage Feedback	4-29
	4.3.2.6	Power Converter Drive	4-31
	4.3.2.7	Line and Bias Voltage Monitors	4-31
	4.3.2.8	Low Voltage Supplies	4-32
	4.3.3	Logic PCB Assy (A2) Functions	4-33
	4.3.3.1	Basic Circuit Element	4-33
	4.3.3.2	Filament Time Delay Timer (FTD)	4-36
	4.3.3.3	High Voltage Control	4-38
	4.3.3.4	Fault Detection Logic	4-39
	4.3.4	High Voltage Assembly (A1)	4-39
	4.3.4.1	Filament Supply	4-40
	4.3.4.2	High Voltage Supplies	4-40
	4.3.5	Grid PCB Supply (A5)	4-41
	4.3.6	Anode Supply (A6)	4-42
	4.3.7	Remote Control Interface	4-42
4.4	DETAILED DISCUSSION OF RF SECTION		4-43
	4.4.1	Optional Input Isolators	4-47
	4.4.2	Optional RF Attenuator	4-47
	4.4.3	Optional Harmonic Filter	4-47
	4.4.4	Optional RF Output Sample Port	4-47
	4.4.5	Optional Output Isolator	4-47
SECTION 5 - MAINTENANCE			5-1
5.1	GENERAL		5-1
5.2	TEST EQUIPMENT REQUIRED		5-2
5.3	PREVENTIVE MAINTENANCE		5-2
	5.3.1	Visual Inspection	5-4
	5.3.2	Routine Cleaning	5-4
	5.3.3	Lubrication	5-7
	5.3.4	Paint Touch-Up	5-7
5.4	RF OUTPUT POWER CHECK		5-7
5.5	ADJUSTMENT AND CALIBRATION		5-10
	5.5.1	Power Processor Assembly Adjustments	5-11
	5.5.2	High Voltage Assembly Adjustments	5-16

TABLE OF CONTENTS (Continuation)

TOPIC			PAGE NO.
	5.5.3	Optional Anode Adjustment	5-17
	5.5.4	Optional Grid PCB Assembly Adjustments	5-17
	5.5.5	Three Minute Time Delay Adjustment	5-19
	5.5.6	Helix Current Adjustment	5-21
	5.5.7	Helix Trip Adjustment	5-22
5.6	TROUBLESHOOTING PROCEDURES		5-23
	5.6.1	General Fault Isolation	5-23
	5.6.2	Fault Isolation Using Test Equipment	5-27
	5.6.3	Summary Fault Indication	5-27
	5.6.4	Switch Regulator Fault Isolation	5-30
5.7	REMOVAL AND REPLACING PROCEDURES		5-31
	5.7.1	Fan Replacement	5-31
	5.7.2	TWT Replacement	5-32
	5.7.3	HV Assembly Replacement	5-33
	5.7.4	Power Processor PCB Replacement	5-34
	5.7.5	Logic Card	5-35
SECTION 6 -	DRAWINGS AND SCHEMATICS		6-1
6.1	GENERAL		6-1
6.2	DRAWINGS SPECIFIC TO INDIVIDUAL MODEL NO.		6-1
6.3	DRAWINGS COMMON TO THE "K" SERIES		6-2

LIST OF ILLUSTRATIONS

FIGURE NO.		PAGE NO.
1-1	Power Amplifier	1-2
2-1	Prime Power Connections	2-5
3-1	TWTA Front Panel	3-4
3-2	TWTA Rear Panel	3-5
4-1	Functional Block Diagram-Power Amplifier	4-3
4-2	Power Supply Block Diagram	4-7
4-3	Power Processor PCB Block Diagram	4-11
4-4	Pulse Width Increase During Turn-On	4-13
4-5	Turn-On Circuits	4-14
4-6	Power Switch Circuit Operation	4-15
4-7	Power Processor Turn-On Waveforms	4-18
4-8	Bus Rectifier Simplified Schematic	4-21
4-9	Simplified Block Diagram-Switch Regulator	4-22
4-10	Block Diagram Switch Regulator IC	4-24
4-11	Simplified Schematic-Output Bus Voltage Regulation Circuit	4-27
4-12	Simplified Schematic-Switch Regulator Current Limiter	4-30
4-13	Current Differencing Amplifier (CDA)	4-34
4-14	Interlock Circuit Monitor Logic U6A	4-37
4-15	Typical Remote Control Interface	4-44
4-15-1	Remote Interface Connector and Switch	4-45
4-16	Functional Block Diagram-RF Section	4-46
5-1	Microwave Measurements Circuit	5-8
5-2	TWTA Top View	5-12
5-3	High Voltage Assy Test Points & Adjustments	5-14
5-4	Control Indicator Assy Removal/Replacement	5-36

LIST OF TABLES

TABLE NO.	TITLE	PAGE NO.
1-1	LIST OF AVAILABLE TUBES	1-3
1-2	"K" SERIES MODEL DESIGNATION	1-5
1-3	ELECTRICAL SPECIFICATIONS	1-6
1-4	MECHANICAL/ENVIRONMENTAL SPECS	1-7
5-1	TEST EQUIPMENT REQUIRED	5-3
5-2	VISUAL INSPECTION ITEMS	5-5
5-3	ROUTINE CLEANING PROCEDURE	5-6
5-4	JUMPER CABLE	5-15
5-5	GRID SUPPLY JUMPERS	5-20
5-6	OVERALL FAULT ISOLATION INDICATIONS	5-25
5-7	REGULATOR MEASUREMENTS	5-26
5-8	FAULT ISOLATION USING TEST EQUIPMENT	5-28

SAFETY SUMMARY

THIS EQUIPMENT HAS BEEN DESIGNED TO MINIMIZE EXPOSURE OF PERSONNEL TO SAFETY HAZARDS. THE NATURE OF THE EQUIPMENT IS SUCH THAT THERE ARE CERTAIN INHERENT HAZARDS THAT REQUIRE THAT THE OPERATOR OR TECHNICIAN WORKING WITH THIS EQUIPMENT HAVE CERTAIN SPECIFIC TRAINING AND KNOWLEDGE. THE RF AMPLIFIER TUBES USED IN THE EQUIPMENT OPERATE WITH HIGH VOLTAGE POWER SUPPLIES AND DELIVER HIGH LEVELS OF MICROWAVE ENERGY. OPERATORS OR TECHNICIANS THAT WORK WITH THIS EQUIPMENT MUST BE TRAINED IN THE USE OF SUCH EQUIPMENT AND FAMILIAR WITH THIS PARTICULAR UNIT. GUIDELINES FOR DEALING WITH SAFETY HAZARDS ARE INCLUDED IN THE SUPPLEMENTARY DATA SECTION OF THIS MANUAL. YOU SHOULD BECOME FAMILIAR WITH THESE GUIDELINES PRIOR TO OPERATING OR SERVICING THE EQUIPMENT.

PLEASE READ AND OBSERVE THE FOLLOWING CAUTIONS AND WARNINGS THAT ARE CONTAINED IN THE BODY OF THIS MANUAL.

CAUTION/WARNING	TEXT PAGE
CAUTION	
OPERATING THE TWTA WITH UNTERMINATED OR EXCESSIVE LOAD VSWR COULD CAUSE DESTRUCTION OF THE TWT AND WILL VOID THE WARRANTY. THE MAXIMUM LOAD VSWR SHOULD NOT EXCEED 1.5 : 1.	2-3
WARNING	
LETHAL VOLTAGES UP TO 5 KV ARE PRESENT IN THE POWER AMPLIFIER WHEN IT IS OPERATING. USE EXTREME CAUTION WHEN WORKING INSIDE THE UNIT. AS AN ADDED PRECAUTION, IT IS RECOMMENDED THAT ANOTHER PERSON BE PRESENT TO GIVE AID IN CASE OF ACCIDENT.	5-10
CAUTION	
BEFORE PROCEEDING WITH INITIAL TURN-ON, ALL PROCEDURES DEFINED IN SECTION 4 SHOULD BE COMPLETE AND VERIFIED.	3-6

SAFETY SUMMARY (Continuation)

CAUTION/WARNING	TEXT PAGE
CAUTION	
DO NOT EXCEED THE LIMITS SPECIFIED IN THE TWTA DATA SHEETS.	3-8
WARNING	
LETHAL VOLTAGES UP TO 5 KV ARE PRESENT WHEN POWER IS APPLIED TO THE SYSTEM. BE EXTREMELY CAREFUL WHEN WORKING INSIDE THE UNIT. USE ONLY ONE HAND TO MAKE MEASUREMENTS OR ADJUSTMENTS. IF POSSIBLE, TURN-OFF THE POWER BEFORE MAKING ADJUSTMENTS. DO NOT ATTEMPT TO REPAIR OR TROUBLESHOOT THIS UNIT UNLESS YOU HAVE HAD EXPERIENCE IN SERVICING BOTH MICROWAVE AND HIGH VOLTAGE SYSTEMS AND HAVE READ THE GUIDELINES IN THE SUPPLEMENTARY DATA SECTION OF THIS MANUAL PERTAINING TO HIGH VOLTAGE AND MICROWAVE RADIATION.	5-1
CAUTION	
BEFORE APPLYING PRIME POWER, BE SURE TO TERMINATE THE RF INPUT POWER.	5-2
WARNING	
TURN-OFF ALL POWER BEFORE ATTEMPTING ANY CLEANING OPERATION. WHEN USING SOLVENTS, BE SURE TO PROVIDE ADEQUATE VENTILATION AND AVOID BREATHING THE FUMES. WHEN CLEANING WITH AIR, WEAR SAFETY GOGGLES AND USE CLEAN, DRY, COMPRESSED AIR, NOT EXCEEDING 25 PSI.	5-4
CAUTION	
THIS AMPLIFIER USES AN OFF-LINE REGULATOR TO DEVELOP THE VOLTAGES USED TO OPERATE THE TWT. EXTRA PRECAUTIONS ARE NECESSARY BEFORE THE AMPLIFIER IS SERVICED. IT IS SUGGESTED THAT AN ISOLATION TRANSFORMER BE USED TO PROVIDE AC POWER TO THE AMPLIFIER BEFORE SERVICING THE UNIT.	5-11

SAFETY SUMMARY (Continuation)

CAUTION/WARNING	TEXT PAGE
WARNING	
GRID ADJUSTMENTS MUST BE PERFORMED WITH H.V. OFF. IF H.V.IS ON, THIS WOULD FORCE THE DVM AND THE ADJUSTMENT POTENTIOMETERS TO BE AT CATHODE (H.V.) POTENTIAL. THE FOLLOWING ADJUSTMENTS ARE MADE WITHOUT TURNING-ON THE HIGH VOLTAGE.	5-17
CAUTION	
THIS AMPLIFIER USES AN OFF-LINE REGULATOR TO DEVELOP THE VOLTAGES USED TO OPERATE THE TWT. EXTRA PRECAUTIONS ARE NECESSARY BEFORE THE AMPLIFIER IS SERVICED. IT IS NECESSARY THAT AN ISOLATION TRANSFORMER BE USED TO PROVIDE AC POWER TO THE AMPLIFIER BEFORE SERVICING THE UNIT. IF AN ISOLATION TRANSFORMER IS NOT USED, ALL VOLTAGE AND SCOPE MEASUREMENTS MADE ON THE POWER PROCESSOR PCB (A2) WILL FORCE THE TEST EQUIPMENT TO FLOAT AT THE LINE POTENTIAL. IF THE TEST EQUIPMENT IS GROUNDED, THEN DAMAGE WILL BE INDUCED IN THE TWTA. IF THE TEST EQUIPMENT IS NOT GROUNDED, THE TEST EQUIPMENT WILL BE HAZARDOUS BECAUSE IT WILL BE AT LINE POTENTIAL.	5-23
CAUTION	
THE RETURN FOR THE 1A2U10, 1A2U11, and 1A2U12 SUPPLIES IS ABOVE CHASSIS GROUND.	5-24

CONFIGURATION DESCRIPTION

MODEL NO.

FINAL ASSEMBLY DWG. NO.

TUBE TYPE:

O/P POWER:

FREQUENCY:

PRIMARY POWER OUTPUT:
(AT TIME OF SHIPMENT)

RF INPUT TYPE/LOCATION:

RF OUTPUT TYPE/LOCATION:

SPECIAL FEATURES: #

SEE SPECIAL FEATURES SECTION FOR DETAILS ON ITEMS
MARKED WITH THIS SYMBOL (*)

SECTION 1

INTRODUCTION

1.1 GENERAL

The Varian "K" series Medium Power Amplifiers (Figure 1-1) are completely self-contained units that provide all necessary power supplies, forced air cooling, RF components, controls, and indicators required to support a variety of TWTs with power capabilities of 10 to 20 Watts continuous wave (CW). Table 1-1 lists the available tube types. The 3-1/2 inch (8.89 cm) high units are designed for bench top operation or slide mounting in a standard 19-inch (48.26 cm) rack cabinet. Standard prime power for the unit is 115 VAC, 50 to 60 Hz.

1.2 TWTs AND OPTIONS AVAILABLE

A number of TWTs and options can be specified for the "K Series" amplifiers.

1.2.1 TWTs Available

The basic model number of an individual amplifier is directly related to the TWT selected for a particular application. Table 1-1 presents the basic "K-Series" model numbers, the specific TWT for that model number, and the gain, frequency band, and output power level of that TWT.

1.2.2 Standard Options Available

Standard options available are summarized in Table 1-2.

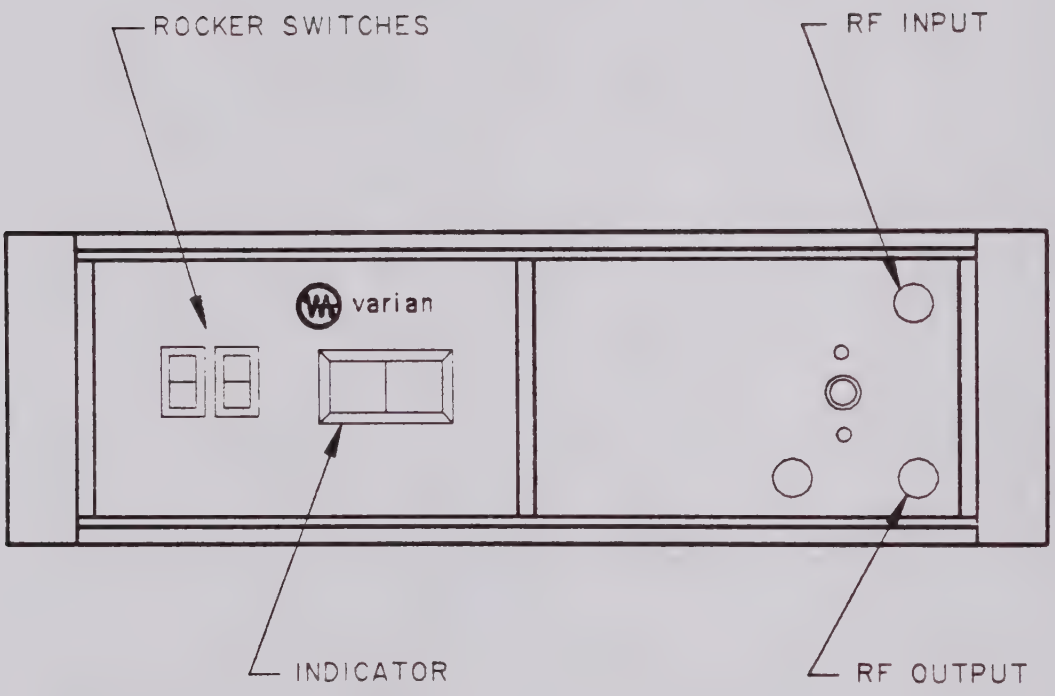

FIGURE 1-1 POWER AMPLIFIER

1022/12-84
II MAN.1022

TABLE 1-1

LIST OF AVAILABLE TUBE TYPES

AND THE ASSOCIATED TWTA MODEL NO.

TWTA MODEL NUMBER	TWT NUMBER	TWT OUTPUT POWER WATTS	FREQUENCY GHz	NOMINAL GAIN (dB)
VZS-6950K1	VTS-6055A1	10	2.0 - 4.0	30
VZH-6970K1	VTH-6079H1	10	4.0 - 10.0	35
VZX-6980K2	VTX-6089H3	10	8.0 - 12.4	40
VZL-6941K1	VTL-6140B1	20	1.0 - 2.0	35
VZS-6951K1	VTS-6150B1	20	2.0 - 4.0	35
VZS-6951K2	VTS-6150J1	20	2.0 - 4.0	54
VZC-6961K1	VTC-6166B1	20	4.0 - 8.0	35
VZC-6961K2	VTC-6166J1	20	4.0 - 8.0	50
VZX-6981K1	VTX-6186B1	20	8.0 - 12.4	40
VZU-6991K1	VTU-6196B2	20	12.0- 18.0	40
VZM-6991K3	VTM-6196B1	20	8.0 - 18.0	40
VZU-6990K1	VTM-6096R1	10	8.0 - 18.0	37
VZU-6998K1	VTU-6090A1	2	12.4- 18.0	30
VZU-6998K2	VTU-6090H1	2	12.4- 18.0	60

1.2.3 Non-Standard Options (Special Features)

Non-standard options, designated as Special Features, are also available to meet specific application requirements. In the past, Special Features requested have included:

a. Optomized power and gain over non-standard frequency ranges.

b. More stringent environmental performance

c. Special finishes

1.3 MODEL NUMBER INTERPRETATION

Each "K Series" configuration is designated by a specific model number. When the configuration is a basic unit plus up-to-four standard options, the model number completely describes the unit (see Table 1-2). Special units with non-standard options (special features) are identified by the model number used on the applicable engineering drawings. When Special Features are included, they are described in detail in the Special Features Section of this manual. Engineering drawings that define a specific Model Number incorporating Special Features are included in the Special Features Section of this manual.

1.4 SPECIFICATIONS

The unit is designed to meet the specifications defined in Tables 1-3 and 1-4.

TABLE 1-2

"K SERIES" MODEL AND OPTION DESIGNATIONS

Standard form of "K Series" Model Numbers. Example:

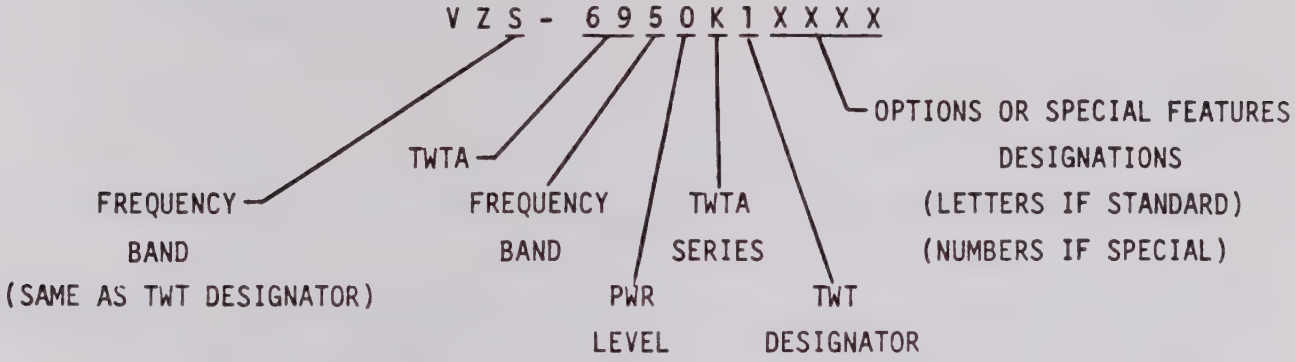

Basic unit without options would be: Example: VZS-6950K1

Standard Options Available:

A.	Input Isolator	G.	Remote Interface
B.	Input Attenuator	H.	Elapsed Time Meter
C.	Harmonic Filter	J.	Rear RF Connectors
D.	Output Isolator	K.	115/230 VAC Prime Power
E.	Output Sample Port		
F.	Chassis Slides		

Model Number with up to four standard options. Example:

VZS-6950K1ADFK (Includes Input Isolator, Output Isolator, Chassis Slides and 115/230 VAC power).

Model number for special features and/or more than four options.

Example: VZS-6950 1432

TABLE 1-3

ELECTRICAL SPECIFICATIONS OF STANDARD "K-SERIES"
CW POWER AMPLIFIERS

PARAMETER	VALUE
Power Levels	10 to 20 Watts CW standard
Frequencies	1 to 18 GHz
Gain	30 to 60 dB
Input/Output Impedance	50 ohms, nominal TWT impedance or waveguide
Noise Figure	30 dB, maximum of all 1, 2 and most 10 Watt CW TWTAs; 35 dB, maximum for 20 Watt CW (and above) TWTAs.
Power Output Stability	Typically ±0.25 dB/24 hours at constant drive and constant temperature.
Spurious, AM and PM Noise Levels	Total spurious output typically -50 dBc, excluding harmonics and residual modulation.
Prime Power	115 volts ±10%, 50 to 60 Hz, single phase. Optional 230 VAC operation.

TABLE 1-4

MECHANICAL/ENVIRONMENTAL SPECIFICATIONS
"K-SERIES" CW POWER AMPLIFIERS

PARAMETER	VALUE
Size	
Height	3-1/2 inches (8.9 cm)
Width	19 inches (48.26 cm)
Depth	21 inches (53.3 cm)
Weight	35 pounds, maximim (15.9 kg).
Cooling	Integral forced air, rear panel intake and exhaust
Temperature Range	+32 to +122°F (0 to +50°C) standard operation. All metal ceramic tubes rated for high reliability in military environments, typically -65 to +230°F (-54 to +110°C).

1.5 GENERAL DESCRIPTION

The amplifiers have modular construction and are designed for simple and reliable operation. They are self-protected against damage from most internal and external fault conditions. The full specified frequency band is covered without need for tuning or operator adjustment. Once placed into operation, the amplifiers will automatically recycle after prime power interruption in as short a time as possible consistent with TWT warm-up requirements and return to the mode selected before the power interruption.

The power amplifier is contained in a single 19-inch (48.26 cm) wide drawer assembly designed for slide mounting in a standard rack cabinet. The amplifier is 3-1/2 inches (8.89 cm) high by 20 inches (50.8 cm) deep. Functionally, the TWTA can be divided into the Power Supply section and the RF section. Physically, the unit consists of the following:

Control/Indicator Assembly
Main Chassis Assembly
Power Processor PCB Assembly
High Voltage Assembly
Optional PCB Assemblies
RF Components

1.5.1 Control/Indicator Assembly

The Control/Indicator Section consists of switches, indicators and a logic card that forms the left-hand Front Panel Assembly. The switches control Prime Power (ON/OFF), High Voltage (ON/OFF) and fault indicator reset. Individual LED indicators display PRIME POWER ON, STANDBY, OPERATE, SUMMARY FAULT, and HELIX FAULT. HELIX CURRENT is displayed on an LED linear array (See Section 4.0 for specific details on the controls and indicators). All logic functions required for the Power Amplifier are incorporated into the Logic PCB which is mounted on the left-hand Front Panel.

1.5.2 Main Chassis Assembly

All of the major assemblies are mounted on the Main Chassis Assembly. The rear panel of the Main Chassis contains the programmable power plug, interface connections, cooling fan, and optional rear mounted RF connectors. The bottom of the Main Chassis serves as a baseplate.

A portion of the Prime Power Interface circuits, the distributor, optional auto transformer, and some large capacitors are included as part of the Main Chassis Assembly. Approximately one-half of the interior of the Main Chassis is used to mount the TWT and other RF components.

1.5.2.1 Prime Power Interface Circuits. Standard prime power is 115 VAC, 50 to 60 Hz. The standard prime power interface circuits include an RFI line filter and a bias transformer for the low voltage supplies. Non-standard prime power is accommodated by alternate components added to the prime power interface circuits.

1.5.3 Power Processor PCB.

The Power Processor incorporates a switching regulator and power converter to drive the High Voltage Assembly and a set of rectifiers, filters and regulators that supply the necessary regulated low voltages for the fan, logic, and indicator circuits. This assembly also includes circuits to limit in-rush current during TWTA turn-on, protection circuits, and foldback current limiting.

1.5.4 High Voltage Assembly.

The High Voltage Assembly provides the filament, grid anode, helix, and collector voltages required to operate the family of TWTs that can be used in the "K-Series" CW power amplifiers.

1.5.5 RF Components

The RF Section includes the RF input and output connection (which are normally mounted on the right Front Panel), the TWT, and all associated optional RF components such as attenuators, elapsed time meter, directional coupler, isolators, filter, etc. that are selected for a particular model.

1.5.6 Other Components

Additional assemblies such as the Grid/Anode PCB, Remote Control Assembly, and 115/230V auto-transformer are also included in certain models to support specific options.

SECTION 2

UNPACKING AND INSTALLATION

2.1 UNPACKING AND INSPECTION

2.1.1 Pre-Inspection

Before unpacking, inspect the exterior of the packing container for evidence of damage in shipment. If damage seems evident, immediately contact the carrier that delivered the unit and submit a damage report. Failure to do so could invalidate future claims.

2.1.2 Unpacking

Carefully unpack and remove all items. Save all packing material until all inspections are complete. It is recommended that all packing material be saved for potential future use.

2.1.3 Check Packing Slips

Verify that all items listed on the packing slips have been received.

2.1.4 Post Unpacking Inspection

Inspect all items for evidence of damage in shipment. If damage seems evident, immediately contact the carrier that delivered the equipment and file a claim. Failure to do so could invalidate future claims.

Check the unit thoroughly for damaged or loose parts. To remove the top cover of the RF unit, remove the fasteners at the rear of the cover and lift the cover off. After visual inspection is complete, reinstall the cover and tighten the fasteners.

2.1.5 Pre-Installation Electrical Inspection

A preliminary electrical inspection may be performed at this time. However, due to the complexity of interconnection, it is advised that electrical inspection be performed after installation of the equipment in its final operational position in the rack or bench assembly. If an electrical inspection is required, before installation in the final assembly, refer to Section 4 for procedures. The following basic steps must be completed.

a. Verify a proper termination on the input and output of the TWTA.
b. Verify proper AC prime power connections to the TWTA.
c. Follow the initial turn-on procedures as detailed in Section 4.0.

2.2 MECHANICAL INSTALLATION

The following procedures should be followed for installation of the TWTA into the final operating position in the rack assembly.

2.2.1 Rack Installation (Optional)

The TWTA may be mounted) in a standard 19-inch (48.26 cm) wide RETMA rack cabinet using optional chassis slides. The following procedures should be followed:

a. Locate the desired front panel arrangement and exact panel locations for the TWTA on the rack cabinet.

b. Mount the mating slides (supplied when the option is selected) to the rack cabinet. Refer to the outline drawings of the TWTA included in Section 6 of this manual for exact dimensioning of the rack slide center lines with relation to the unit front panel.

c. If required, remove the feet and bail assembly from the unit, install in the rack.

2.2.2 RF Connections

The following applies to most models. Carefully align interconnecting cables so as to minimize stress on the fittings. Attach the RF lines taking care not to overtighten them (this could damage connector interfaces or threads).

****
CAUTION
****

Operating the TWTA with unterminated or excessive load VSWR could cause destruction of the TWT and will void the warranty. The maximum load VSWR should not exceed 1.5 : 1.

****

2.2.3 Cooling

The TWTA is forced air-cooled by an internal fan. The exhaust air from the TWTA may be at a relatively high temperature; and the overall heat dissipation may be as high as 400 Watts. To prevent heat build-up, it is advisable that the exhaust air be directed away from the air intake areas located on the rear and side of TWTA. A minimum free air space should be allowed for cooling: eight inches (20.32 cm) at the rear of the unit and four inches (10.16 cm) on the sides. If used, the external exhaust ducting must have a cross sectional area at least equal to that of the exhaust opening. Exhaust duct bends and transitions must be smooth and bend radii should be as large as possible. In most cabinet installations it is suggested that an exhaust fan be located at the top of the equipment rack.

2.3. ELECTRICAL INTERCONNECTION

Electrical interconnections to the system consist of prime power, ground connections, optional remote control interface, and all applicable external RF input and output connections.

2.3.1 AC Prime Power

Prime power requirement for the subsystem is nominal 115 VAC or optional 230 VAC, 50 to 60 Hz. Prime power must be single-phase, three wire, with the third wire as earth ground. Wire used for connecting the prime power to the system should be sized for the appropriate current, as determined by the prime power voltage (nominal 500 VA power consumption). Prime power is applied to terminals L and N of connector J1 and the earth ground wire is supplied to GRD on the rear panel. If 230 VAC is applied to a unit wired for 115 VAC, the fuse will blow. If 115 VAC is applied to a unit wired for 230 VAC, the unit will detect a low-line fault and the summary fault indicator will light. For 230 VAC operation, the three prong plug supplied must be replaced with a connector suitable for the available service (See Figure 3-1).

2.3.2 Grounding

It is necessary for personnel and equipment safety to securely ground the amplifier to the station ground bus or to earth ground. The TWTA ground connection is located on the rear panel.

2.3.3 External Connections

If the Remote interface option is included in the TWTA, refer to Section 4.3.7 of this manual for additional detail.

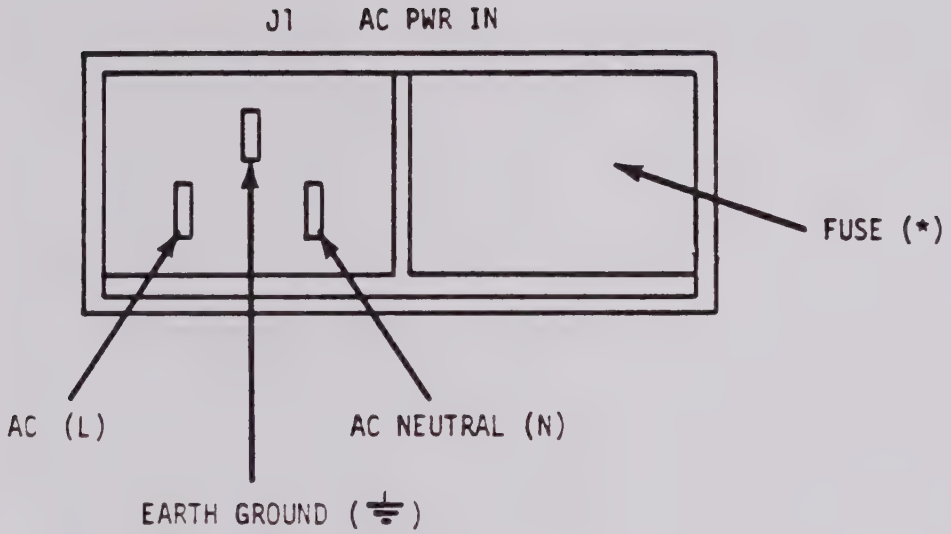

(*) FUSE SELECTION

PRIME POWER	FUSE
115V AC	6.25A, SLOBLO
230V AC	3A, SLOBLO

FIGURE 2-1

1030-1/85

PRIME POWER CONNECTIONS

2.4 REPACKAGING FOR SHIPMENT

The instructions given below are intended as a general guide for repackaging the TWT amplifier for shipment. A detailed discussion on returning goods can be found on the back of the warranty sheet at the rear of this manual. If you have any questions, contact the Varian field office in your area for assistance.

2.4.1 Shipping Container

Place the system in the original shipping container, making sure that there is adequate packing material around all sides of the system, and that the front panels are protected with thick cardboard strips. If you do not have the original container, use heavy wooden boxes with adequate protection.

2.4.2 Sealing Container

Seal the shipping containers with heavy tape or metal bands.

2.4.3 Marking

Write the words "Fragile", "Delicate Instrument", etc. in several places on the outside of the shipping container.

NOTE

If the system is to be shipped to Varian for service or repair, please attach a tag to it identifying the owner. Also please indicate the service or repair desired, the problems encountered and any other information that would be of value to the service facility.

In all applicable correspondence, please refer to the unit by both the model number and the serial number.

Please use the following shipping address for all returned products:

Varian Associates
Microwave Equipment Division
3200 Patrick Henry Drive
Santa Clara, California 95054
Attention: Customer Support

SECTION 3

OPERATION

3.1 GENERAL

This section describes normal operation of the TWTA. The operating modes, the controls, the indicators, the meters, and the turn-on and turn-off procedures are discussed. All controls are located on the front or rear panel of the TWTA. Status and fault indicators display the status of the unit at all times. Helix current is displayed on the Front Panel.

Once the unit has been placed in operation, it is suggested that a logbook be kept in which to record current readings, approximate running time, approximate RF power output, and all maintenance activity performed on the unit.

3.2 OPERATING MODES

A Front Panel Indicator (Power ON) indicates when the TWTA is turned-on. The four operating modes for the TWT amplifier include: Filament Time Delay, Standby, Operate, and Fault.

3.2.1 Filament Time Delay

In this mode, which occurs immediately after prime power is turned-on (Power ON), the power supply provides power to the TWT Filament (Heater). Helix and collector voltages are inhibited for approximately three minutes after initial TWTA turn-on. After the TWT heater has reached its operating temperature, the inhibit circuits de-energize and high voltage may be applied to the TWT.

The Filament Time Delay circuitry provides proportional time delay if a prime power failure occurs. If the prime power is interrupted during normal operation, the Filament Time Delay circuits will automatically recycle. The circuits are designed so that a full, three-minute delay is not required if the outage period is short (up to 89 seconds) and the recycle period is proportional to the outage period. Longer outage periods (more than 90 seconds) result in a full three-minute delay.

If the TWTA is in the OPERATE mode when a power outage occurs, the TWTA will automatically recycle back to the OPERATE mode when the delay period is over.

If the TWTA is in the STANDBY mode when a power outage occurs,it will automatically recycle to the STANDBY mode after a power outage period.

NOTE

The use of the Power ON switch to turn-on or to turn-off the TWTA results in the same performance as that associated with prime power outages external to the TWTA.

3.2.2 Standby

This mode sequentially follows the Filament Time Delay and is indicated by the STANDBY LED being lighted. In this mode, filament voltage is applied to the TWT and high voltage is OFF. STANDBY is defined as no filament time delay, high voltage OFF, and no faults.

3.2.3 Operate

The OPERATE indicator lights whenever the HV ON control switch has been turned-on, and if there are no faults or Filament Time Delay. In this mode, Collector and Helix voltages are applied to the TWT.

3.2.4 Fault

The Fault mode is always indicated by a lighted SUM FAULT indicator. The Helix Fault indicator will also light if the fault is caused by excessive helix current. The SUM FAULT indicator is a summary alarm. The following faults cause this fault indicator to light: high helix current, TWT over-temperature, internal interlock open, and certain over/under voltage or current conditions in the power supply. The SUM FAULT indicator also indicates a lockout condition on two tube-related fault conditions: helix over-current and collector over-temperature . If either of the two tube faults occur, the HV ON switch must be turned-OFF to reset the fault and then turned-ON again to restore an OPERATE condition and to clear the fault indications.

****
WARNING
****

LETHAL VOLTAGES UP TO 5 KV ARE PRESENT IN THE POWER AMPLIFIER WHEN IT IS OPERATING. USE EXTREME CAUTION WHEN WORKING INSIDE THE UNIT. AS AN ADDED PRECAUTION, IT IS RECOMMENDED THAT ANOTHER PERSON BE PRESENT TO GIVE AID IN CASE OF ACCIDENT.

****

3.3 METERS, CONTROLS AND INDICATORS

Figures 3-1 and 3-2 show the Front and Rear Panels of the TWTA.

3.4 INITIAL TURN-ON

Certain precautions must be taken to protect the power amplifier against damage from unknown conditions when the TWTA is first turned-on after installation at the user site. Once proper overall operation is verified in the final installation, normal turn-on and turn-off may be performed as described in subsequent sections.

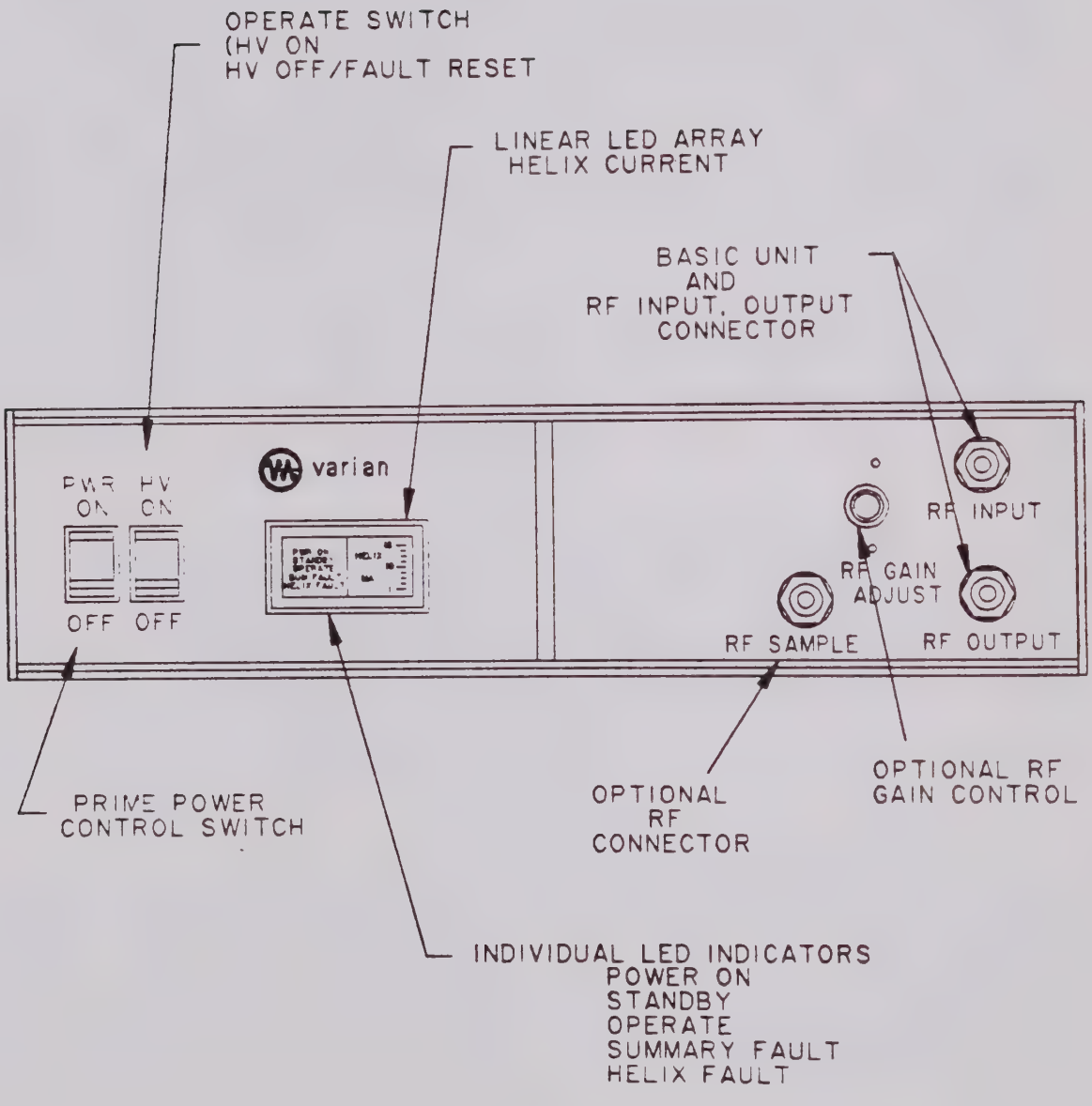

FIGURE 3-1

TWTA FRONT PANEL

1017/12-E
11 MAR

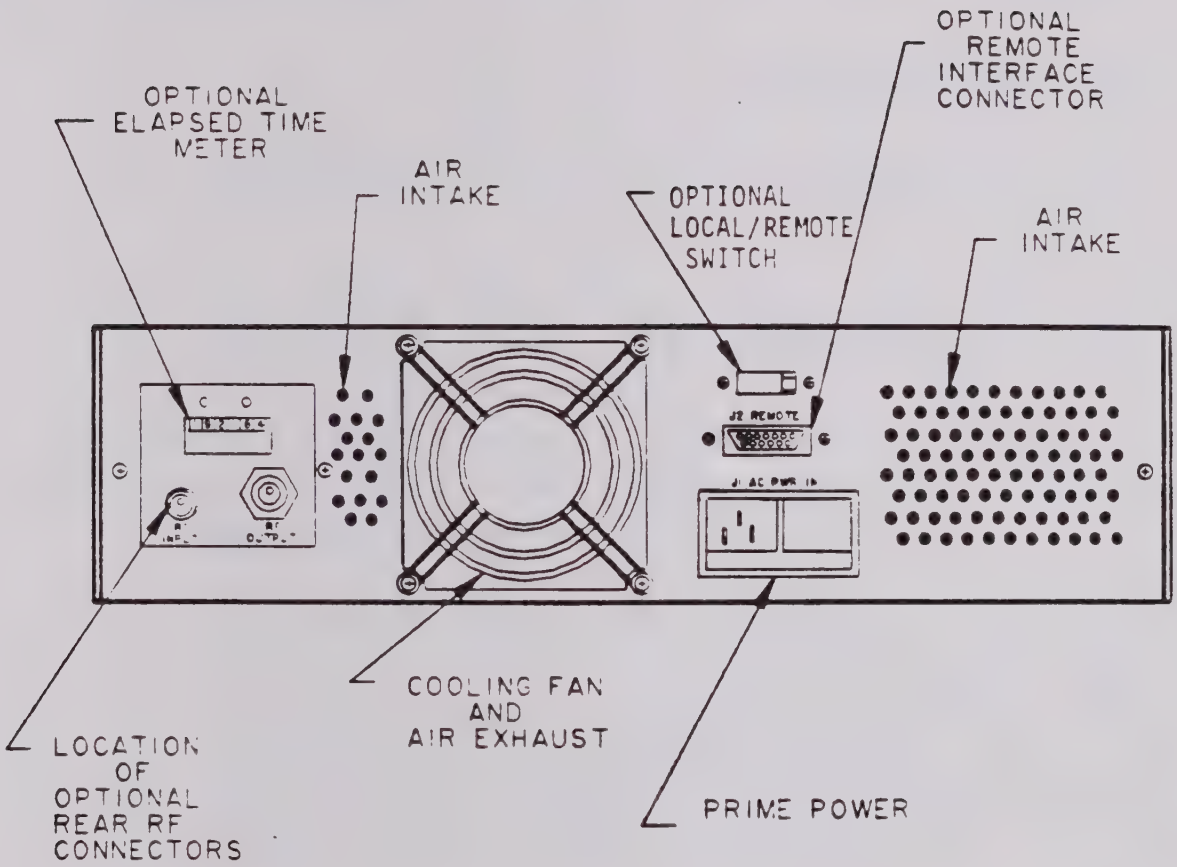

FIGURE 3-2

TWTA REAR PANEL

****

CAUTION

****

Before proceeding with initial turn-on, all procedures defined in Section 4 should be complete and verified.

****

3.4.1 Pre-Power Check

Before applying prime power to the system, verify that the following conditions are met:

a. The available prime power voltage must be within the ratings of the amplifier.

b. The output must be terminated in a load capable of dissipating at least twice the rated output power at the intended operating frequency.

c. The load VSWR must be less than 1.5 : 1.

d. An RF drive source must be set to the correct frequency and preset for minimum output. (Do not operate the TWTA without either a drive source or an input termination.

e. The rear air exhaust and intake ports and the side air intakes of the TWT Assembly must not be blocked.

Failure to observe any of the above conditions can cause catastrophic damage to the unit and will void the warranty.

NOTE

The unit was adjusted and tested at the factory brfore shipment and no further adjustments should be required.

3.4.2 Turn-On Sequence

a. If an RF drive source is connected to the TWTA, rotate the GAIN control of this source to the minimum output power level setting. Set the HV control switch to OFF.

b. Turn-on the Power Switch. Verify that only the PWR ON indicator lights. No readings should be obtained on the HELIX CURRENT meter at this time.

c. Approximately three minutes after power is applied, the STANDBY indicator should light.

d. Set the HV CONTROL switch to HV ON. Verify that the STANDBY indicator turns-off and the OPERATE indicator lights. Verify that a helix current reading is obtained on the display. Verify that this reading is consistent with the tube data sheet supplied with the unit.

e. Slowly increase the RF drive and verify on the external power meter that RF is being amplified.

NOTE

If the optional Gain Control is included in your TWTA and no reading is obtained on the external power meter, rotate the GAIN control clockwise until the desired output is obtained.

****

CAUTION

****

Do not exceed the limits specified in the TWTA Data Sheets.

****

f. Set the HV CONTROL SWITCH to OFF. Verify that the OPERATE indicator turns-off and the STANDBY indicator lights.

The power amplifier system is now in normal operation and may be turned-on or turned-off as described below.

3.5 NORMAL TURN-ON

Once the steps defined in Section 2.4 have been completed, normal turn-on can be accomplished very simply, unless there is reason to suspect that a significant change in operating conditions has occurred during the off-time. The following steps may be performed if the normal turn-off procedure has been followed:

a. Turn-ON the power switch and verify that the PWR ON indicator lights.

b. When the filament time delay is complete (after approximately three minutes), verify that the STANDBY indicator lights. Operate the HV CONTROL switch and verify normal current meter reading and output RF level.

c. If automatic turn-on is desired, the HV ON switch may be left in the HV ON position. In this mode, when the filament time delay is complete, the unit will automatically return to full operation.

3.6 TURN-OFF

If the Power Amplifier is to be turned-off for less than two hours, it should be placed in STANDBY by setting the HV Control Switch to OFF. This permits the fan to run and minimizes thermal and electrical shock to the heater. If the off-time is to be extended, the unit should be turned-off completely to save heater life and prime power.

a. Set the HV Control switch to OFF.

b. Let the system run in the STANDBY mode for five minutes in order to cool the TWT and all other components.

c. Turn-OFF the Power Switch to remove prime power from the unit.

SECTION 4

THEORY OF OPERATION

4.1 GENERAL

This section provides a detailed description of the functions and Theory of Operation of the TWTA.

Detailed schematic diagrams for each of the major subassemblies defined in this section are included in Section 6 of this manual and should be used for reference in the following text descriptions.

NOTE

The reference designations used in the discussions in this section are the same as those on the applicable schematic. The reader should be aware of the fact that the complete reference designation usually requires a prefix to fully identify each compoment. For example, the full reference designation of chassis mounted capacitor C1 whould be UD1C1 which is usually written as 1C1. Similarly, capacitor C1 on the Power Processor Assembly (A2) would be fully identified as 1A2C1. Within the text for a particular assembly, the simplified reference (e.g. C1) is used for components included in that assembly and the full reference designation is used for components external to the assembly being discussed.

Understanding the Theory of Operation of the TWT Amplifier is a necessity for the technician who will maintain the equipment, and an asset for the operator. A thorough understanding of the Theory of Operation of the equipment provides for a more efficient operation, and quicker and more effective repairs if problems should develop. This section (as well as the guidelines on high voltage and microwave radiation that are contained in the Supplementary Data Section) should be completely understood before the performance of any maintenance activity on the system.

All the available standard options are covered in the discussion of the Theory of Operation of the TWTA even if such options are not included in your specific TWTA (See Section 1.0). Special features (non-standard options) are discussed separately in the Special Features Section of the manual.

4.2 FUNCTIONAL DESCRIPTION

A simplified block diagram of the Power Amplifier (PA) is presented in Figure 4-1. While all of the TWTA components are mounted in a single drawer assembly, it is convenient to discuss the unit in terms of the Power Supply Section and the RF Section. Section 4.2 briefly discusses the functions of the Power Supply and RF sections. Detailed discussions are presented in Section 4.3.

4.2.1 Power Supply Functions

The Power Supply section is designed to accommodate a family of Varian Associates Traveling Wave Tubes (TWTs) with CW RF output power levels ranging from 1 to 20 Watts. The major functions of the Power Supply Section are:

a. Prime Power Interface Circuits: These circuits provide the interface between the prime power source and the Power Processor PCB Assembly. 115 VAC, 60 Hz is standard with an option for 230 VAC operation available. The prime power interface circuits

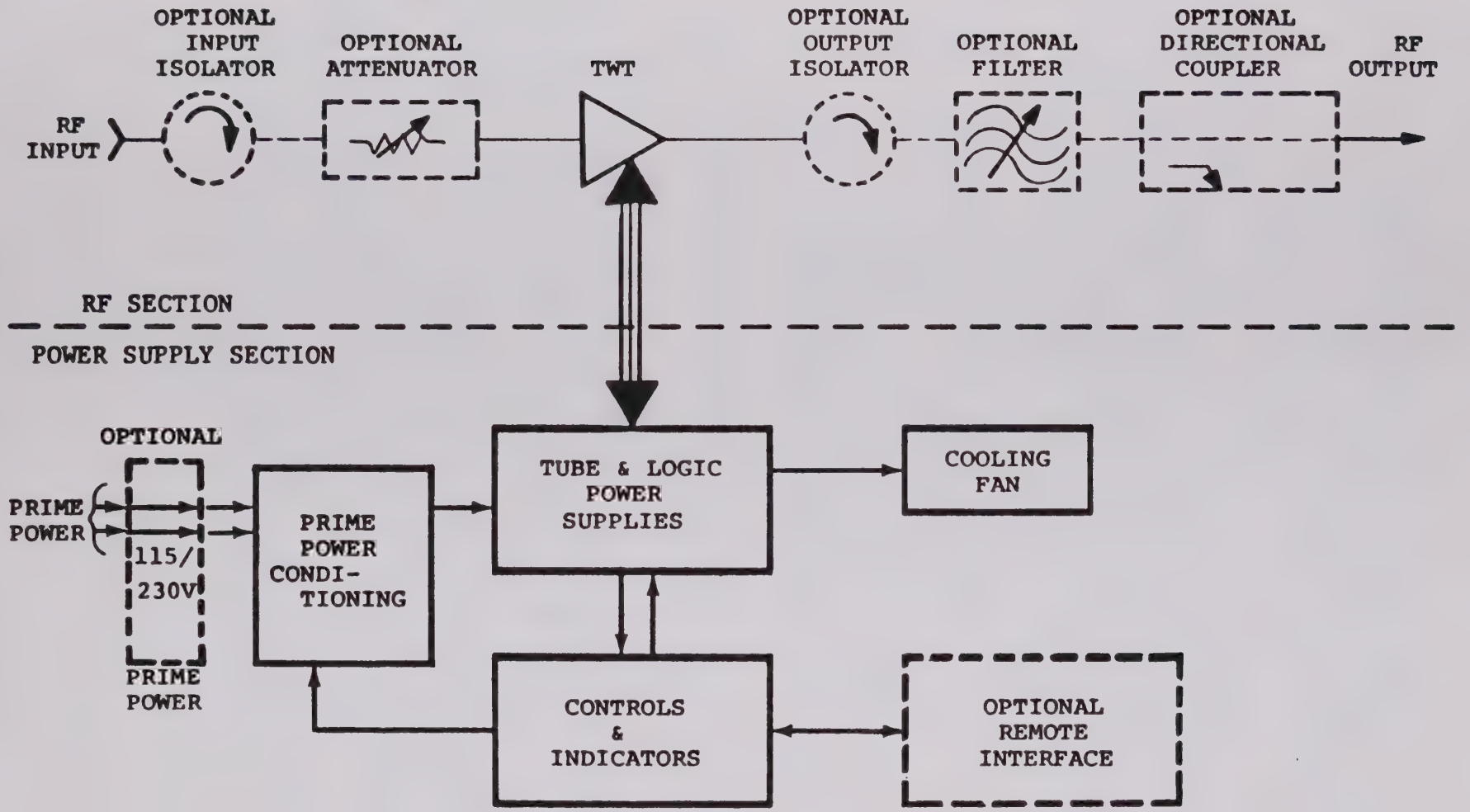

FIGURE 4-1 FUNCTIONAL BLOCK DIAGRAM-POWER AMPLIFIER

include input fusing and RFI filtering required to couple the prime power source (115 VAC or optional 230 VAC) to the Power Supply circuits.

b. High Voltage and Bias Power Supplies: These functions are implemented with two major assemblies, the Power Processor PCB Assembly and the High Voltage Assembly. This portion of the Power Supply circuitry accepts the outputs of the Prime Power Interface circuits and converts prime power into:

    1. The regulated low voltage supplies needed by the protection, control, and indication circuitry.

    2. The high voltage well-regulated supplies required for the TWT.

    3. The low voltage supply needed for the cooling fan.

    4. The low voltage supply needed for power conversion for the high voltage supply.

    5. Grid or anode voltages when required for some of the tube options.

c. Control and Indicator Functions: This portion of the Power Supply provides the circuitry and switches required for control of prime power, TWT high voltage and the optional Local/Remote interface.

Status indications are provided that show the operating state of the TWTA and when certain faults occur. A metering function that displays helix current is also provided. An Optional Elapsed Time Meter is available.

d. Cooling: Cooling air is provided by a small fan mounted on the rear of the TWTA. The dominant source of heat within the TWTA is the TWT which is cooled through a heat exchanger by the air flow from the cooling fan. Before entering the heat exchanger duct, most of the air passes across the power supply circuitry to provide cooling.

e. Optional Remote Control Function: The Remote Control Option connects a number of indicators and controls to the Remote Interface connector.

4.2.2 RF Section Functions

The function of the RF Section is to amplify RF signals in the frequency range of interest, consistent with the specifications for the model purchased. The TWT is the active element and exhibits nominal gains of 30 to 60 dB over a relatively wide frequency spectrum. The user has a number of RF options available. The RF Section is designed to accommodate all of these RF options. The available options allow input and/or output isolation, manual control of TWTA RF gain, output filtering and output/reflected power sampling.

4.3 DETAILED DISCUSSION OF POWER SUPPLY SECTION

A block diagram of the Power Supply Section is shown in Figure 4-2. The Power Supply Section consists of the Prime Power Interface Circuits; the Power Processor PCB Assembly; the cooling fan; the High Voltage Assembly; an optional Grid Supply PCB Assembly; an optional Anode Supply PCB Assembly; (the grid and anode supplies are only installed with certain tube options); the control, fault detection and indicator logic; and the Remote Control Interface.

4.3.1 Prime Power Interface

The function of the Prime Power Interface circuits is to match the Power Supply with the prime power source.

The Prime Power Interface circuits include the distribution and protection circuits that are required to match either a 115 VAC (or optionally 230 VAC), 50 to 60 Hz prime power source to the Power Processor PCB Assembly.

4.3.1.1 Standard Configuration. The basic unit is configured to match a 115 VAC, 50 to 60 Hz prime power source to the Power Supply.

4.3.1.2 Optional 230 VAC Operation. When this option is selected, autotransformer T1 and resistor R1 are installed on the Main Chassis Assembly. Refer to schematic Section 6.

4.3.1.3 Fusing. All TWTAs in this series are equipped with an in-line AC fuse and RFI filter. The fuse value is determined by the prime power voltage to be applied. Use a 6.25 Ampere, slow-blow fuse for 115 VAC or a 3 Ampere, slow-blow fuse for 230 VAC operation.

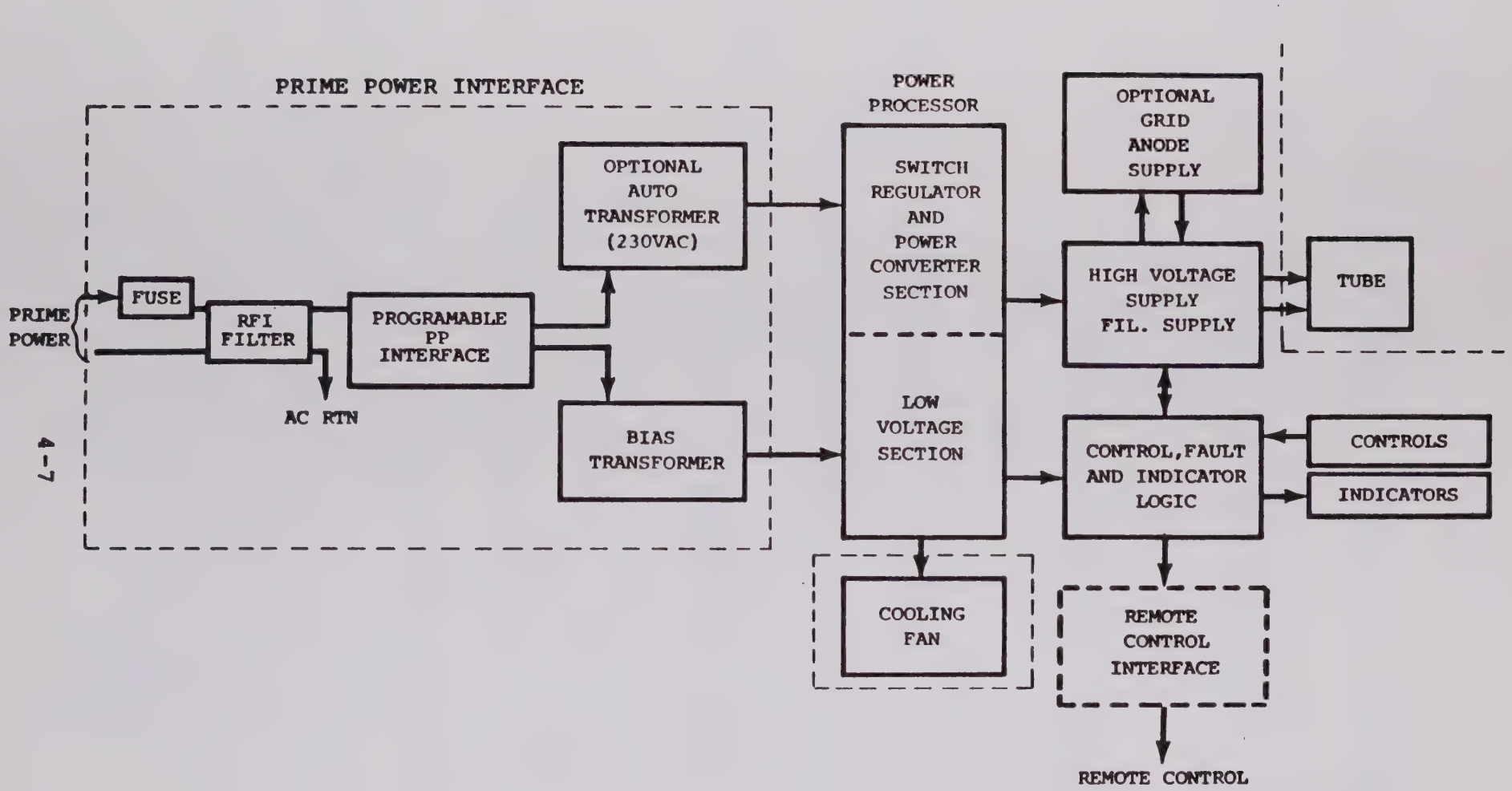

FIGURE 4-2 POWER SUPPLY SECTION BLOCK DIAGRAM

1032-1/85

4.3.1.4 Outputs. The outputs of the prime power interface circuits are:

a. 115 VAC for the Switch Regulator, Filament Supply and optional Grid Supply.

b. 18 VAC for the Low Voltage Bias Supplies.

4.3.2 Power Processor PCB Assembly (A2)

NOTE

In the following discussion of the Power Processor Assembly, all reference designations are preceded by 1A2, e.g. the correct designation for R1 on the Power Processor Assembly would be 1A2R1.

4.3.2.1 Function of Power Processor PCB. The Power Processor provides a number of functions as follows:

a. Turn-on surge current limiting by means of a Triac switch and associated control circuit.

b. A bridge rectifier to provide an unregulated 160 VDC bus for the Switch Regulator.

c. A well-regulated 60 to 115 VDC voltage bus needed for the high voltage circuits. A 40 kHz Switch Regulator is used to provide precise voltage regulation and foldback current control. The foldback current limiting circuits restricts short circuit currents to approximately two Amperes and limits Switching Regulator output currents to 4 to 6 Amperes depending on the specific bus voltage selected. The regulation circuits are effective when the Power Processor PCB Assembly is operated

alone (i.e. no load condition) or when connected to the High Voltage Assembly.

d. A 20 kHz power converter that chops the regulated bus of the Switch Regulator when the Power Processor is connected to the High Voltage Assembly.

e. A Solid State Feedback Amplifier that senses the high voltage on the tube and adjusts the voltage reference of the Switch Regulator to obtain regulation of the high voltage applied to the tube.

f. An isolated control circuit that allows high voltage to be turned-on or turned-off.

g. A bus monitoring circuit that turns-off high voltage if the Switch Regulator bus exceeds a preset value.

h. A line monitor circuit that monitors the prime power voltage level applied to the TWTA and turns-off the high voltage if the voltage is too low.

i. A capacitor discharge circuit that discharges the capacitor input to the Switch Regulator anytime prime power is turned-off.

j. Regulated low voltage bias supplies needed for the TWTA are as follows:.

    1. +15 VDC (referenced to chassis ground) for the cooling fan.
    2. +12 VDC (referenced to chassis ground) for the logic and indicator functions and for the HV Feedback Amplifier and turn-on current limiting circuits.

3. ±5 VDC (referenced to the negative rectified line voltage) for the power converter.
4. +12 VDC (referenced to the negative rectified line voltage) for the Switch Regulator and Power Converter.

All of these functions are provided on a single printed circuit board that may be tested as an isolated assembly. Test points for troubleshooting are provided on the board. Two adjustable controls allow this board to be set-up for any one of the tubes used in this series of TWTAs.

NOTE

Some of the circuits are not referenced to chassis ground because the power supply is based on the use of an off-line power regulator and converter.

A block diagram of the Power Processor PCB Assembly is shown in Figure 4-3.

4.3.2.2 Turn-On Current Limiting. The function of the turn-on current limiter is to prevent excessive prime power in-rush current during start-up of the TWTA.

The Turn-on Current Limiting circuit is designed to gradually increase the portion of time that AC is applied to full wave rectifier CR9 which is connected across the unregulated bus on the input to the Switching Regulator. Figure 4-4 shows the effect of turn-on limiting circuit on the input and output of CR9 during different portions of the start-up cycle.

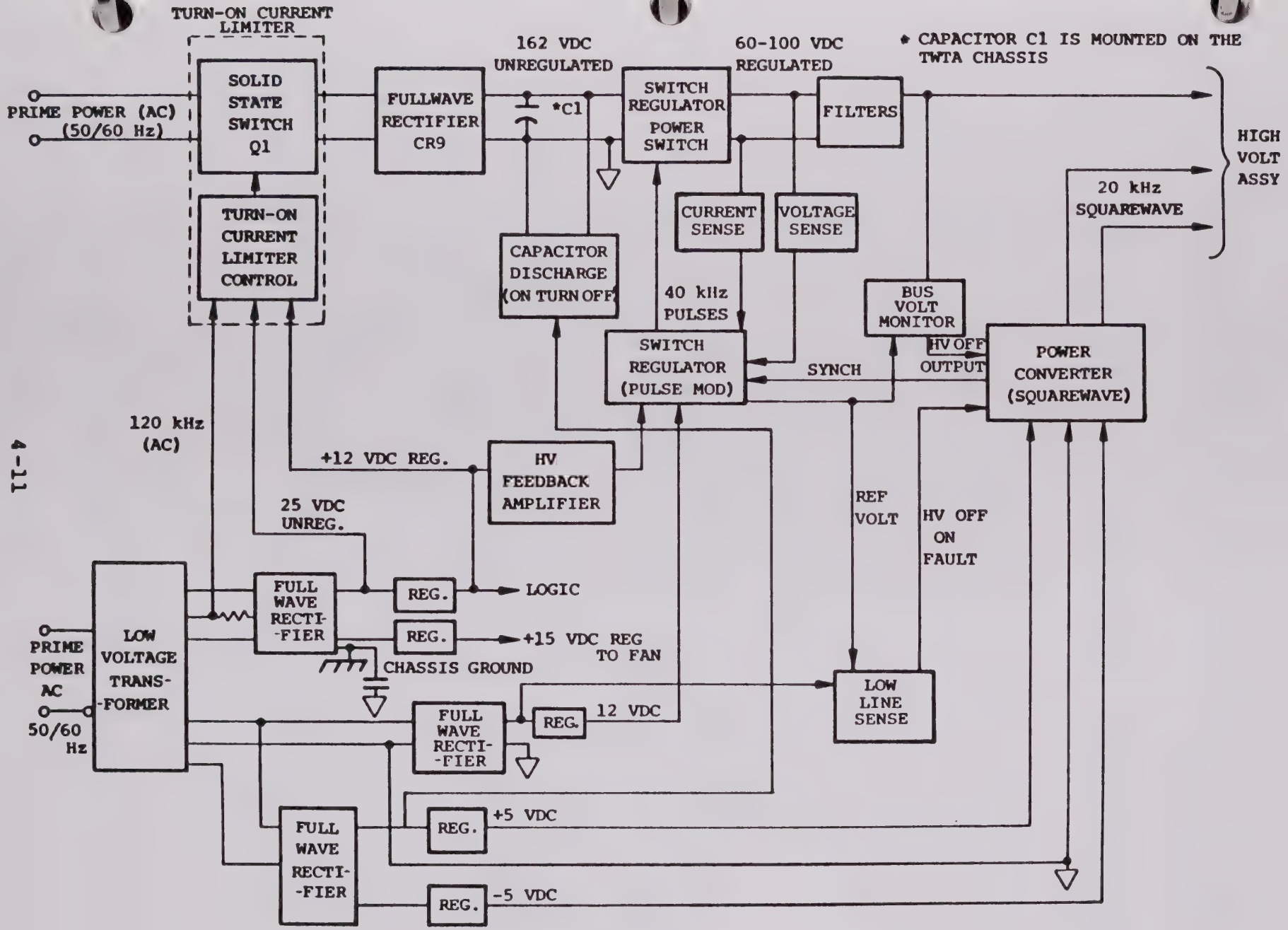

FIGURE 4-3 POWER PROCESSOR PCB BLOCK DIAGRAM

1033-1/85

The cross hatched area indicates the time when voltage is actually applied to CR9 and the approximate appearance of the output waveform.

A block diagram of the Turn-on Current Limiter is shown in Figure 4-5.

The Turn-on Current Limiter consists of:

a. A Power Switch, Triac Q1.

b. A diode bridge (CR10) that allows SCR control (via U8) of an AC signal.

c. An optically-coupled SCR (U8).

d. A control transistor Q2.

e. A phase modulating control circuit (U1A, U1B, U1C, U1D).

Power Switch Q1 is in series with the 115 VAC input to CR9. This switch will conduct when an AC signal of proper polarity is applied to gate G of Q1(Figure 4-5). Whenever the anode potential of Triac Q1 is removed after it has been gated, Q1 stops conducting. This means that every time the AC input voltage to Q1 goes to zero, Q1 stops conducting. If the proper AC signal voltage is applied to gate G, Q1 will conduct as long as the magnitude of the in-phase AC input across Q1 is greater than zero volts. The combination of Q2, U8 and CR10 is used to develop the AC gate signal (See Figure 4-6A).

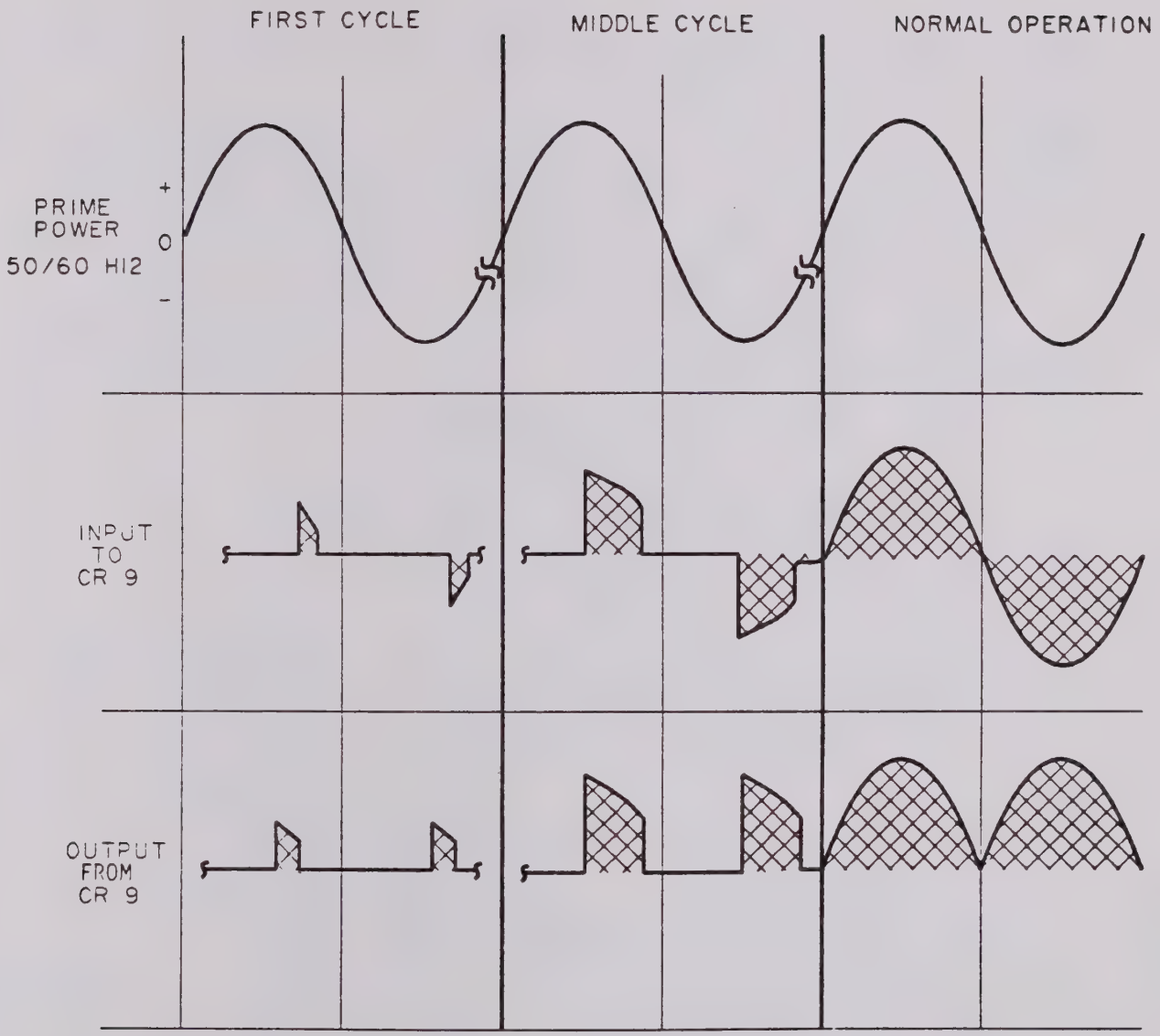

FIGURE 4-4
PULSE WIDTH INCREASE DURING TURN ON

1028/1-83
II.MAN.1028

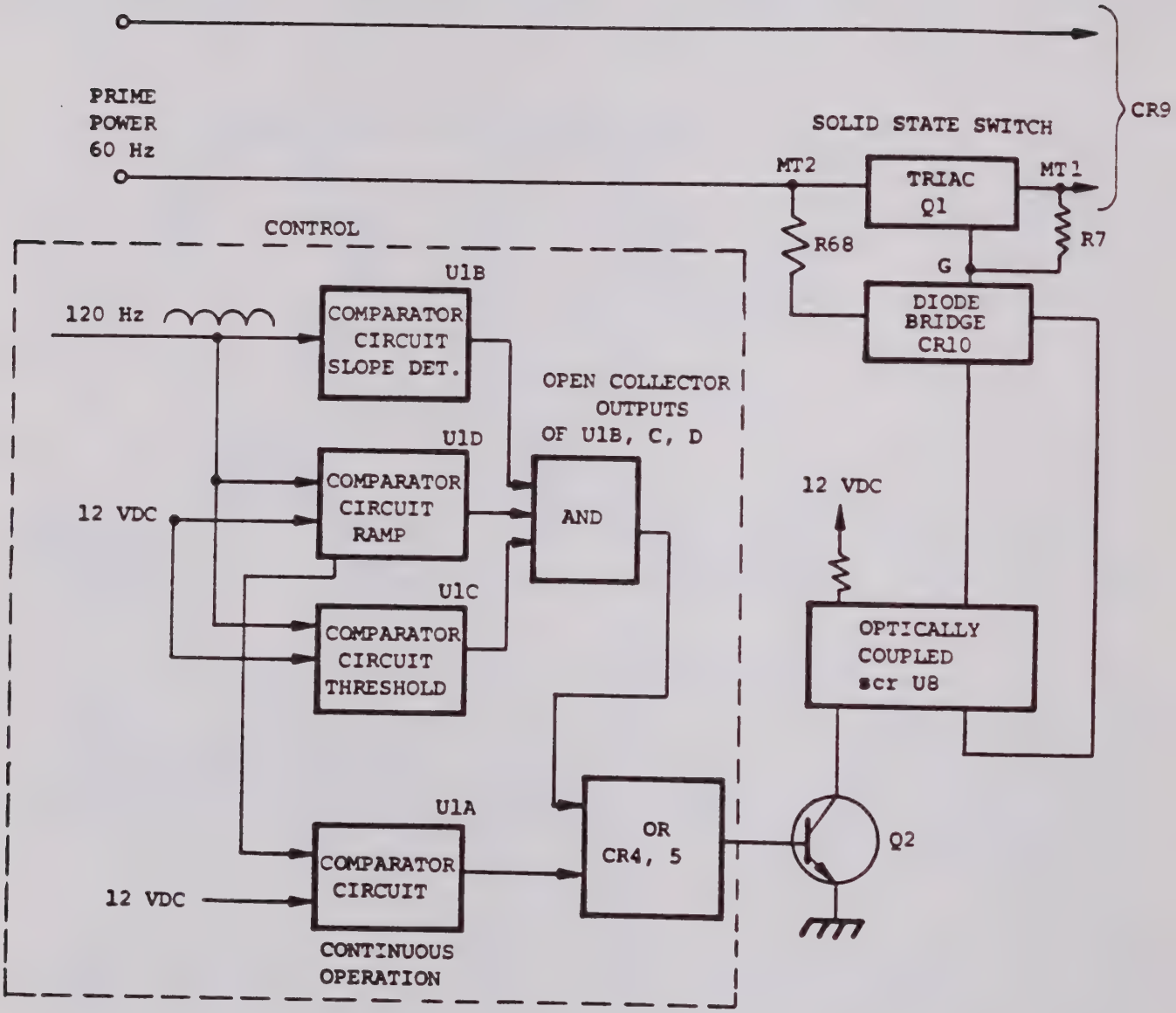

FIGURE 4-5 TURN-ON CIRCUITS

1034-1/85

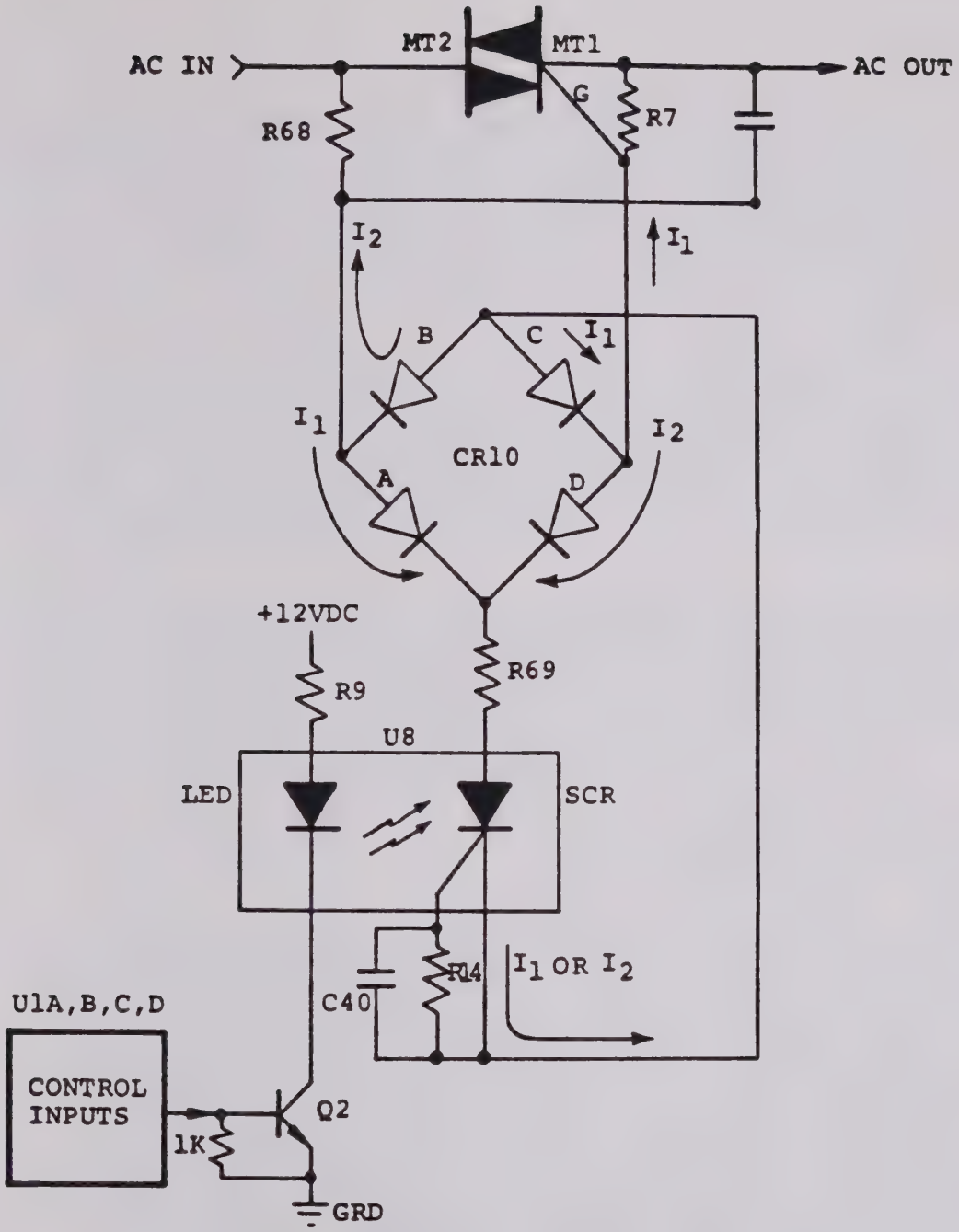

a. BASIC CIRCUITS FOR GATING TRIAC Q1

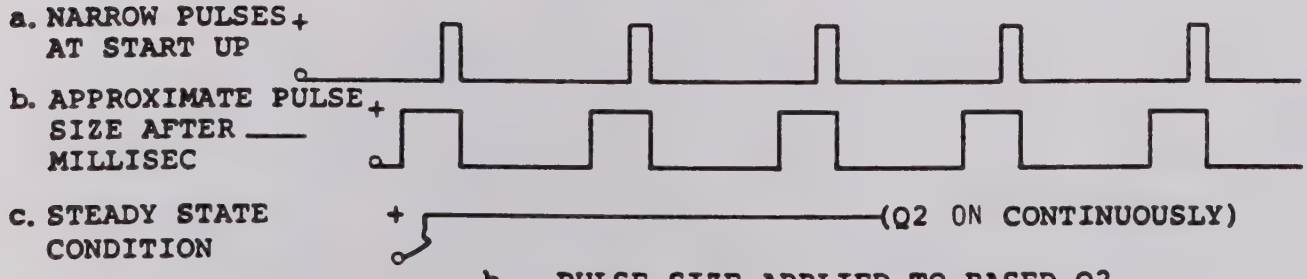

b. PULSE SIZE APPLIED TO BASED Q2

FIGURE 4-6 POWER SWITCH CIRCUIT OPERATION

1035-1/85

For discussion purposes, consider the AC input shown in Figure 4-6 as being divided into half cycle #1 and half cycle #2. As the magnitude of the signal increases during half cycle #1, current I_1 would increase and follow the circuit path shown in Figure 4-6.

The current path during half cycle #1 would be through R68, diode CR10 A of CR10, R69, the SCR portion of U8, diode C of CR10 and to gate G. During half cycle #2, the current would flow in the opposite direction and through diodes CR10 D and B.

Currents I_1 and I_2 can flow only if the SCR portion of U8 is ON. The SCR portion of U8 acts as a latching switch during each half cycle. The switching action is controlled by the LED portion of U8. Transistor Q2 controls the LED portion of U8. When Q2 is on, current flows through the LED portion of U8 which emits light that actuates the SCR portion of U8 (i.e., U8 is an optically-coupled SCR).

Q2 operation is established by the control input circuits (U1A, U1B, U1C, U1D). The function of the control input circuits is to limit the portion of time that Q1 conducts AC current during each half cycle until the start up cycle is complete and then operate Q2 with a 100% duty cycle. This is achieved by turning-on Q2 with pulses that become longer as a function of time. At some point (steady state operation), a constant DC signal is automatically applied to drive Q2.

The block designated Control Inputs in Figure 4-6 consists of the four different circuits shown in Figure 4-5. These circuits are identified in the Power Processor PCB Assembly schematic as the Slope detector (U1B), the Ramp Detector (U1D), the Threshold Detector (U1C) and the CW Control (U1A). All of these circuits are based on the use of a voltage comparator which has a logic high output when the voltage on the comparator plus (+) input is greater than that on the comparator minus (-) input.

Q2 can be turned-on by a logic high from either U1A or the combination of U1B, C and D. The function of U1A (CW Control) is to turn-on Q2 after a preset delay period. When the TWTA is turned-on, the plus (+) input of U1A is pulled to ground by capacitor C3 which is fully discharged at turn-on. The minus (-) input of U1A is tied to the 12 VDC bias through R2. Since the voltage on the minus input is approximately 11.5V and the voltage on the plus side is zero, the output of U1A is low. C3 charges at a rate set by R1 and C3 (approximately 100 milliseconds). When C3 is fully charged, CR1 pulls U1A-5 to 12 VDC and the output of U1A goes high which turns-on Q2 on via CR5.

U1B, U1C and U1D form an AND circuit whose function is to gate Q2 on for increasing periods of time until the CW control circuit takes over control of Q2. The outputs of U1B, C and D are open collector circuits that connect to Q2 via CR4.

a. Slope Detector (U1B). This circuit is designed to permit a high output during the negative going portion of each cycle (see Figure 4-7a). Both inputs of U1B are connected to the same 9 VAC, 120 Hz signal. The purpose of R3 and C2 is to introduce a delay on the plus input (U1B-7) to guarantee that U1B will not go high before the beginning of the negative going portion of the AC signal (See Figure 4-7b). C2 holds U1-7 at a value that is lower than U1-6 when the signal is increasing and higher than U1-6 when the signal is decreasing. If U1B operated alone the result would be a pulse like that shown in Figure 4-7B. The signal applied to U1B is taken from the center tap of 1T1 and reflects the action of CR3 which results in a 120 Hz signal as seen by U1B. As a result, the output of U1B would go high on each half cycle of the 50 to 60 Hz input to T1 as shown in Figure 4-7b.

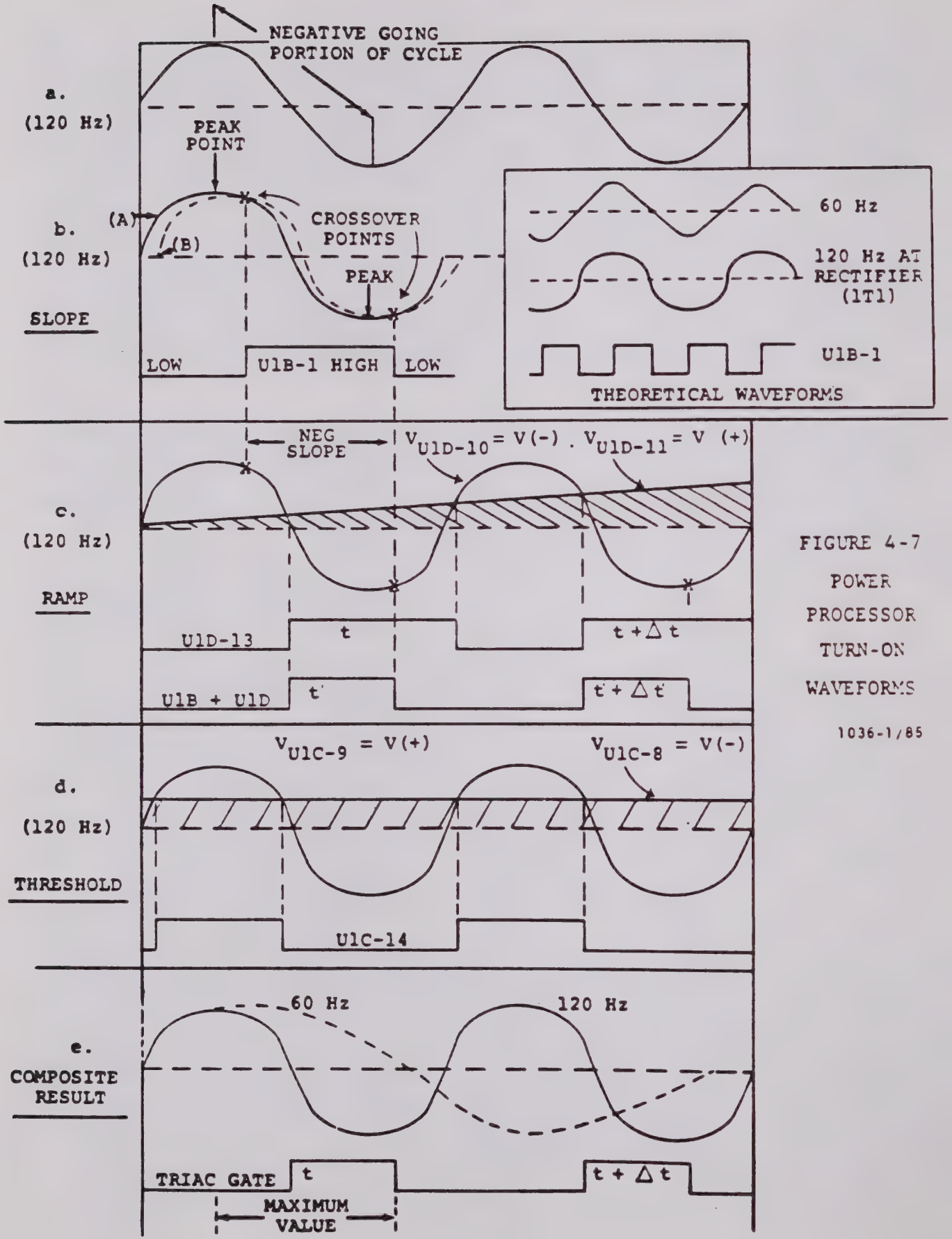

FIGURE 4-7
POWER PROCESSOR TURN-ON WAVEFORMS

1036-1/85

Since U1B-1 (an open collector) is tied to the outputs of U1C and D, the waveforms shown in Figure 4-7b are not actually seen during normal operation of the Power Processor PCB Assembly.

b. Ramp Detector U1D. This circuit is designed to turn-on U1D for longer and longer periods of time as a function of the charge on capacitor C3. As C3 charges, the voltage on U1D-11 increases. The other input of U1D (U1D-10) senses the same 120 Hz AC line that was sensed by U1B (See Figure 4-7c). This shows the increase in the voltage on U1D-11 in exaggerated terms. Each succeeding cycle V(-) is larger than V(+) for shorter periods of time which results in the output of U1D going high for longer and longer periods of time. Remember that the slope detector only worked a portion of the time (X-Slope-X) in Figure 4-7c. The combined result of U1B and U1D would be a signal similar to Figure 4-7c.

c. Threshold Detector. This circuit limits the time when the output of U1C goes high to a portion of the positive half cycle of each 120 Hz cycle (Figure 4-7d). V(+) senses the 120 Hz signal and V(-) senses the 12 VDC bus. The divider string of R2, R4, R5 is used to reduce the V(-) reference voltage to about 1/2 volt. This keeps the output of U1C low during the zero cross-over points of the 50 to 60 Hz prime power cycle.

The composite of the three circuits (U1B, C, D) is shown in Figure 4-7e. The result is a pulse that starts earlier each half cycle of the 60 Hz cycle and cuts off before the zero cross-over point of the 60 Hz input. The maximum value of the pulse width is set by the Slope Detector (U1B) to be less than 1/4 of the 60 Hz signal cycle time.

The net result is that Q2 is turned-on for very short periods during the early stages of start-up, the periods increase to a value just short of a 50% duty cycle until the CW Control Circuit is actuated and then Q2 operates with a 100% duty cycle. This combination of circuits prevents excessive in-rush current with a minimum of energy losses as compared to dissipative type circuits.

4.3.2.3 Bus Rectifier. A 160 VDC unregulated bus is required as an input to the Switch Regulator on the Power Processor PCB Assembly. This bus is generated by the combination of CR9 and capacitor 1C1. (1C1 is mounted on the chassis of the TWTA). The 115 VAC output of the Turn-on Limiter is fed to bridge rectifier CR9 and filtered by capacitor C1. As a safety measure, C1 is discharged by a special circuit whenever the TWTA is turned off. Figure 4-8 is a simplified schematic of the Bus Rectifier, capacitance filter, and discharge circuit. In normal operation, the combination of R73 and R74 (1K each) bias the base of Q18 to about 6.3 volts and Q18 is turned-on. When Q18 is on, this pulls the base of Q16 low and Q16 and Q17 are off. When the TWTA is turned-off, the unregulated 12.7 VDC bus rapidly decays. When this bus voltage falls below 2 VDC, Q18 shuts off and Q16 and Q17 turn-on. When Q17 is turned-on 1C1 is discharged through R77 (390 ohms).

4.3.2.4 Switch Regulator. The Switch Regulator provides a well regulated, adjustable 60 to 115 VDC bus that is used to drive the High Voltage Assembly. A simplified block diagram of the Switch Regulator is presented in Figure 4-9. The Switch Regulator provides the following:

a. A well regulated (0.2%) DC bus that is adjustable over the range of 60 to 115 VDC.

b. Regulated Bus output under load or no-load conditions. (This is referred to as pre-regulation since overall regulation is obtained by feedback from the high voltage output to the TWT).

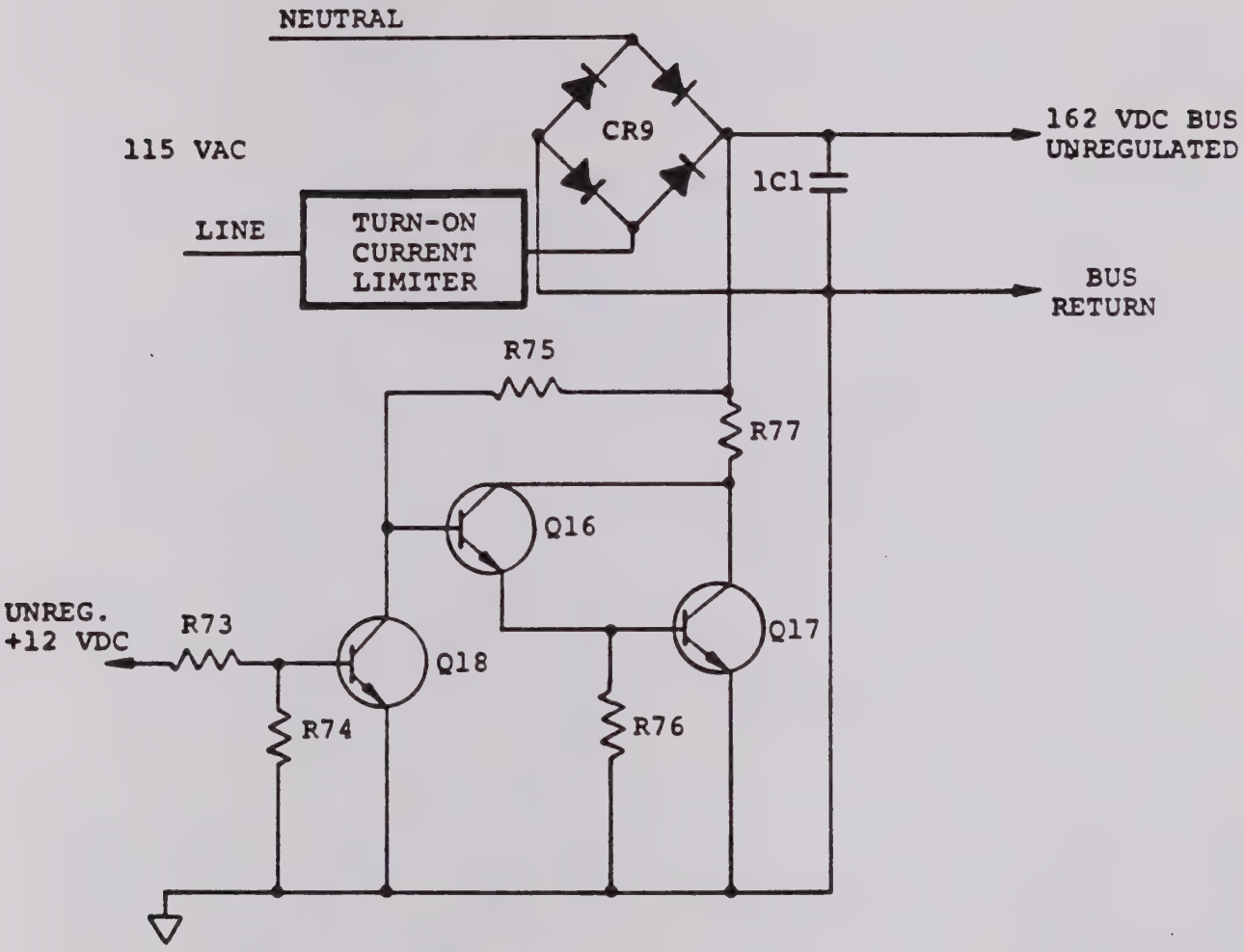

FIGURE 4-8 BUS RECTIFIER SIMPLIFIED SCHEMATIC

1037-1/85

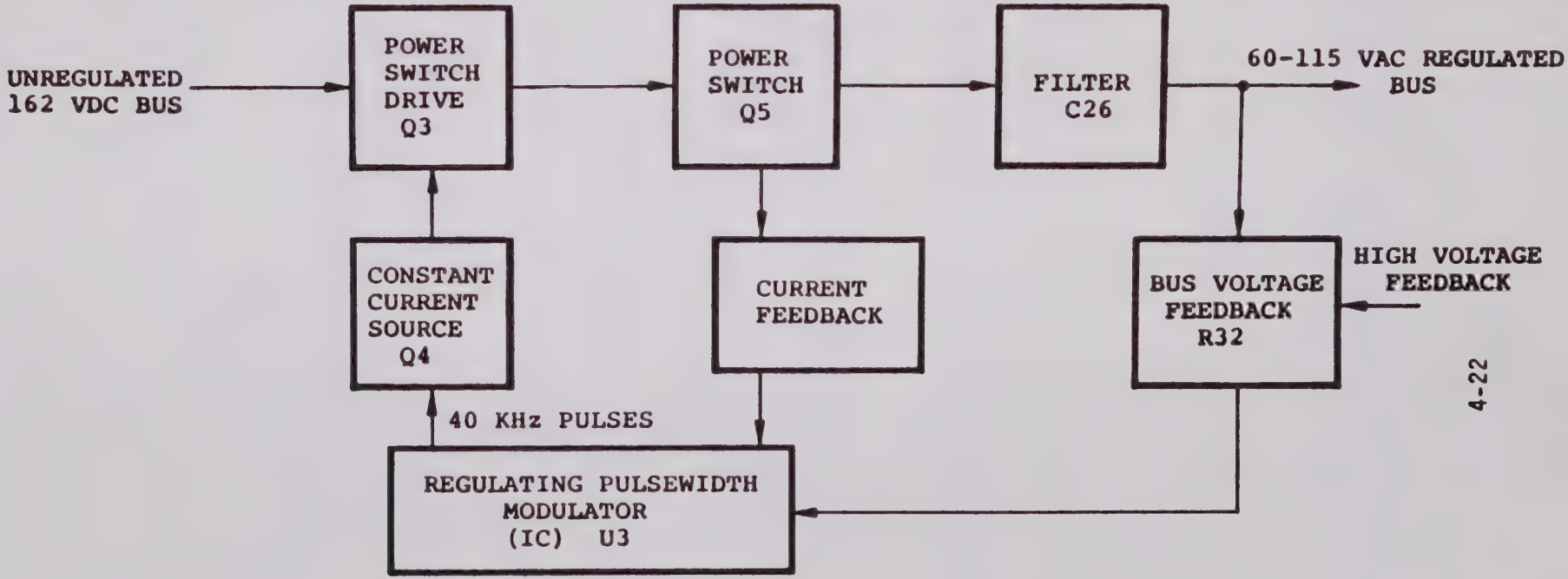

FIGURE 4-9 SIMPLIFIED BLOCK DIAGRAM-SWITCH REGULATOR

c. Current limiting with foldback that limits short circuit currents to 2 amperes and normal operating currents to the range of 4 to 6 Amperes depending on the bus voltage selected.

d. Regulation of the high voltages applied to the TWT during normal operation.

Integrated circuit U3 is the focal point of the Switch Regulator. A simplified schematic of U3 is presented in Figure 4-10.

U3 incorporates a combination of circuits that produce pulses on the collector/emitter of a pair of transistors that operate 180 degrees out of phase with each other. The frequency of these pulses is established by an internal oscillator which is controlled by an external R/C network. These pulses can be used as separate outputs (e.g. 20 kHz on C_A/E_A and 20 kHz on C_B/E_B) or can be added together to form a pulsed output at twice the frequency (e.g. the two 20 kHz pulse outputs when combined would be 40 kHz.) The width of the pulses is controlled by an internal comparator.

One input of this comparator is driven by the ramp signal that is generated by the internal oscillator. The other comparator input (sense input) is connected to the output of three internal circuits, an error amplifier, a current limiter, and a shut-down circuit. The internal comparator varies the width of the output pulse train in response to signals from the three control circuits.

A low signal on the compensation point (pin 9) from any one of the these three circuits causes the output of the comparator to go proportionally high. This output is inverted by the two NOR circuits feeding QA and QB and turns-off QA and QB until the internal comparator output goes low again.

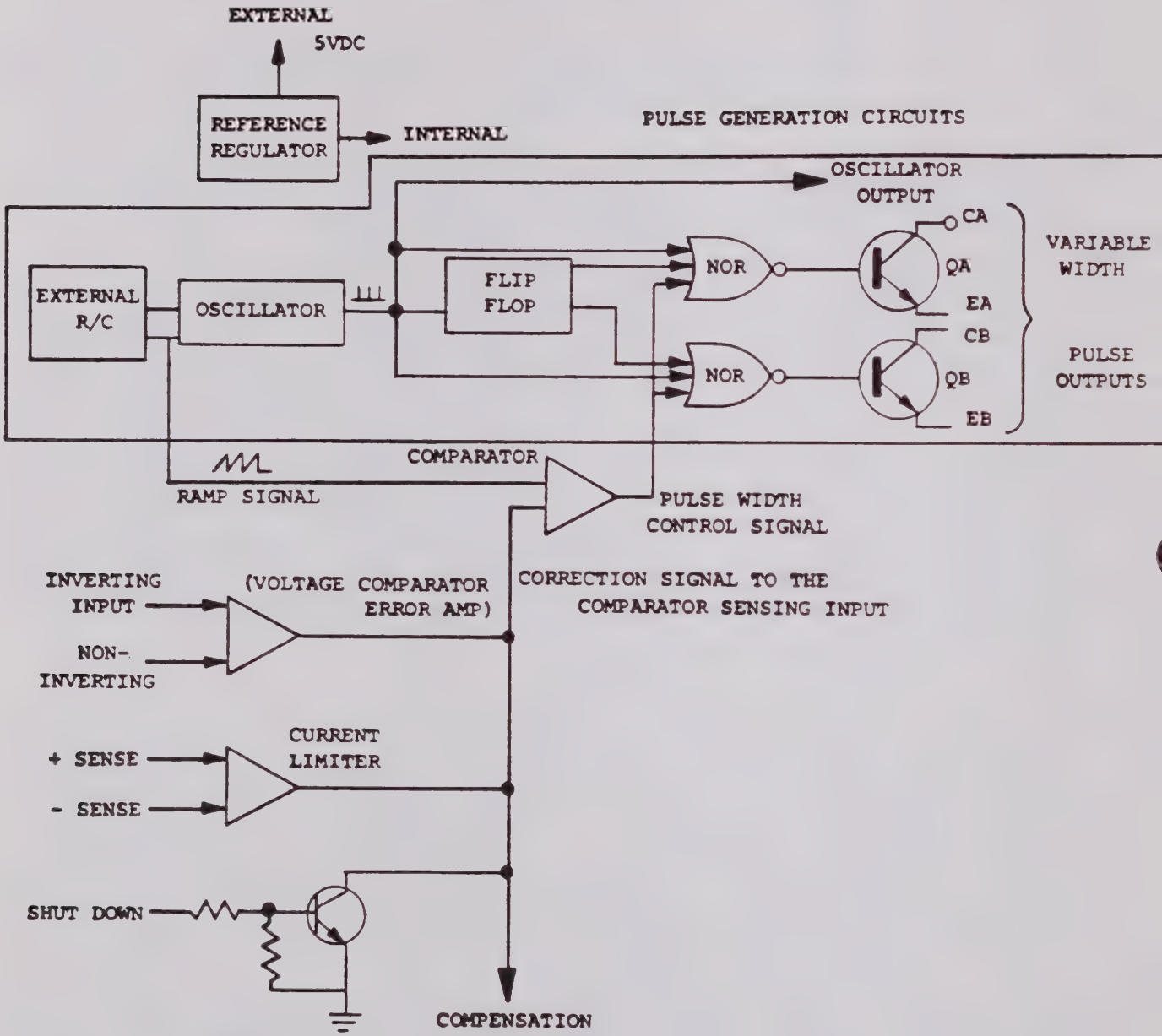

FIGURE 4-10 BLOCK DIAGRAM SWITCH REGULATOR IC

1039-1/85

The same IC is used for the Switch Regulator and the Power Converter. In the Switch Regulator, the shut down circuit is not used (SD tied to ground) and the outputs of QA and QB are tied together to provide a 40 kHz pulse train.

U3 is set to oscillate at a frequency lower than that of Power Converter IC U4. The characteristics of this IC are such that if a higher frequency signal is applied to the sync input (pin 3) of U3, the oscillator will be forced to operate at this higher frequency. C19 and R21 set the time constant for U3 and C34 and R55 control U4. Since both capacitors are the same and R21 is 3.9 K while R55 of U4 is 3.32 K, U3 would operate at a rate that is lower than that of U4 if there was no sync signal from U4.

Figure 4-9 shows a 40 kHz output from U3 driving a constant current source (when Q4 is ON) consisting of Q4 and R26. This circuit matches U3 which is a low voltage device with the relatively high voltage unregulated bus and provides immunity to line voltage variations.

Transistor Q3 is used to provide the current amplification needed to operate Power Switch Q5. The combination of L1, R12 and R13, which are associated with Q3, provides for sharp cut-off of Q5 which results in faster switching times and thus higher regulation efficiency.

The primary power switching circuit consists of Q5, and R20. Q3 acts as a switch to turn-on and to turn-off Q5. During the time that Q5 is on, the current delivered to L2 is increasing. When Q5 is turned-off, this current starts to decay. C26 stores the charge delivered via L2. When Q5 is off, the stored energy in L2 starts to release in such a way as to continue the current flow in the same direction in the loop formed by L2, C26, and CR13. Output voltage and output current are sensed to regulate the output bus.

a. Output Voltage Sensing. As mentioned earlier, U3 includes an error amplifier that is used to monitor the bus voltage established by Q5. Figure 4-11 shows a simplified schematic of the Voltage Regulator circuits. The error amplifier reference voltage is established with resistors R35 and R36 to approximately +3.3 VDC which is applied to the non-inverting input (U3-2) of the error amplifier. The bus voltage is sampled and divided down with resistor string R72 and R33. R33 allows adjustment of the output bus voltage. The sample voltage is applied to the inverting input of the error amplifier via R30. R33 is adjusted to balance the two inputs at the desired output bus voltage. As noted earlier, when the error amplifier output goes high, the pulse width of the drive to the power switch gets longer and when the output goes low the pulse width gets shorter. Therefore, when the sense voltage on R33 goes high, this effect is inverted and the pulse width gets smaller which reduces the bus voltage until the error amplifier inputs balance. Similarly, a decrease in the voltage on R33 results in larger pulse widths until balance is achieved.

The combination of C21, R70, R71, and C42 are used to provide proper loop stability. The combination of R29, C24 and R30 reduce the effects of high frequency noise. R72 and C27 provide a lead network to obtain proper feedback stability.

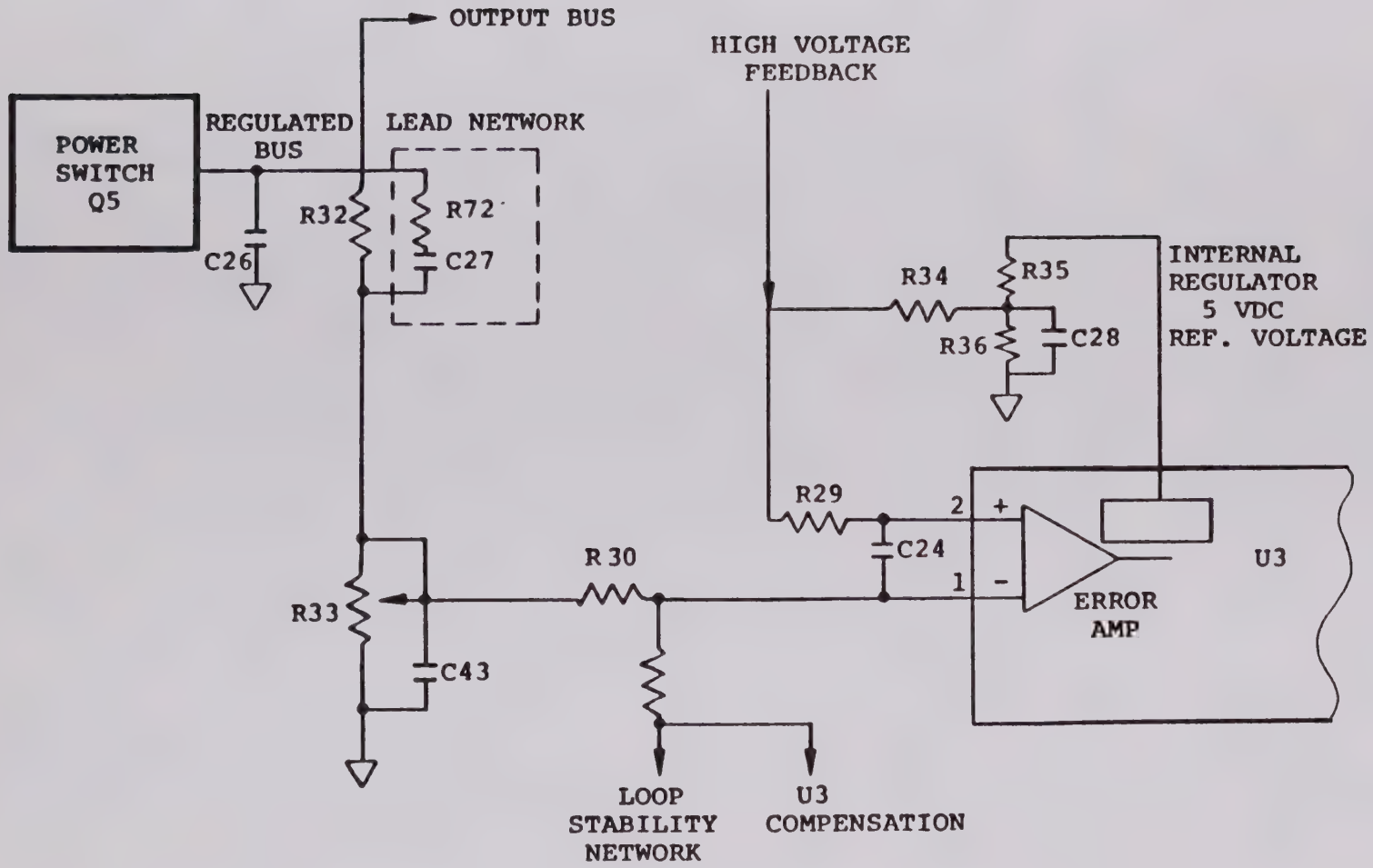

FIGURE 4-11 SIMPLIFIED SCHEMATIC-OUTPUT BUS VOLTAGE REGULATION CIRCUIT

b. Current Limiting. The function of the Foldback Limiting Circuit is to limit the current output of the Switch Regulator. This subsequently limits current through the Power Inverter and High Voltage Supplies. In Figure 4-12 the transistor marked QA is used to sense the voltage between point (A) on QA and point (B). ES is selected so that during normal operation QA is turned off. When QA is turned-on, the width of the pulses from U3 are reduced. QA operates with a built-in threshold of 0.2 VDC.

R25 is used to monitor Switch Regulator current. One ampere equals 0.1V, two amperes = 0.2V and five amperes = 0.5V. If the regulator bus were shorted to the load return, the regulator bus voltage would approach zero and E1 would approach zero. Therefore, the voltage on pont A would essentially be that across R25 (E2). As the short circuit current increases above two amperes ES becomes approximately -0.2V and QA turns-on. This results in a signal to the comparator that in turn reduces the width of the pulse from U3 to the power switch. The result is that Switch Regulator current is limited to about two amperes. When the bus voltage (EB) is not zero, a positive voltage (E1) is developed across R24. Assume that EB is +100 VDC, then voltage E1 would be 0.003 amperes x 100 ohms = +0.3 VDC. Since ES = 0.3V (E1) + (E2) and E2 = -I x R25, the operating current must be at least five amperes if ES is to be -0.2 VDC. When this occurs, U3 pulse widths are reduced which causes a reduction in bus voltage EB. Now it takes less current to keep ES at -0.2 VDC and QA generates a signal to further reduce EB. The result is that the Switch Regulator output current finally drops to two amperes and EBV approaches zero (See the graph in

Figure 4-12). This progressive cycle is known as current foldback, therefore, the current limiter of the Switch Regulator is described as as foldback current limiter.

The function of transistor QB (Figure 4-12) is to provide temperature compensation for the current limiter.

4.3.2.5 High Voltage Feedback. The function of this circuit is to provide for direct regulation of the high voltage output to the TWT. The signal from the High Voltage Assembly is compared against an adjustable reference and generates an error signal that can be used to control U3. This circuit also isolates the high voltage feedback signal from the error amplifier of U3.

U9 is the High Voltage Feedback Amplifier. A voltage proportional to the high voltage applied to the TWT is fed back from the High Voltage Assembly to the Power Processor PCB Assembly. The feedback voltage is a few volts above ground potential. This voltage is applied to one input of U9 (pin 2) and compared to the reference voltage on U9-3. The reference voltage on U9-3 can be adjusted over a fairly wide range with resistor R19. Zener CR11 is used to provide a stable regulated reference voltage across R19. When the high voltage feedback signal increases or decreases with respect to the balanced condition, the output of U9 will change proportionally. This change is amplified by transistor Q6 and fed to optical coupler U5. The output of U5 is connected to the reference point of the error amplifier of U3. An increase in the reference voltage of U3 drives the bus higher and vice-a-versa.

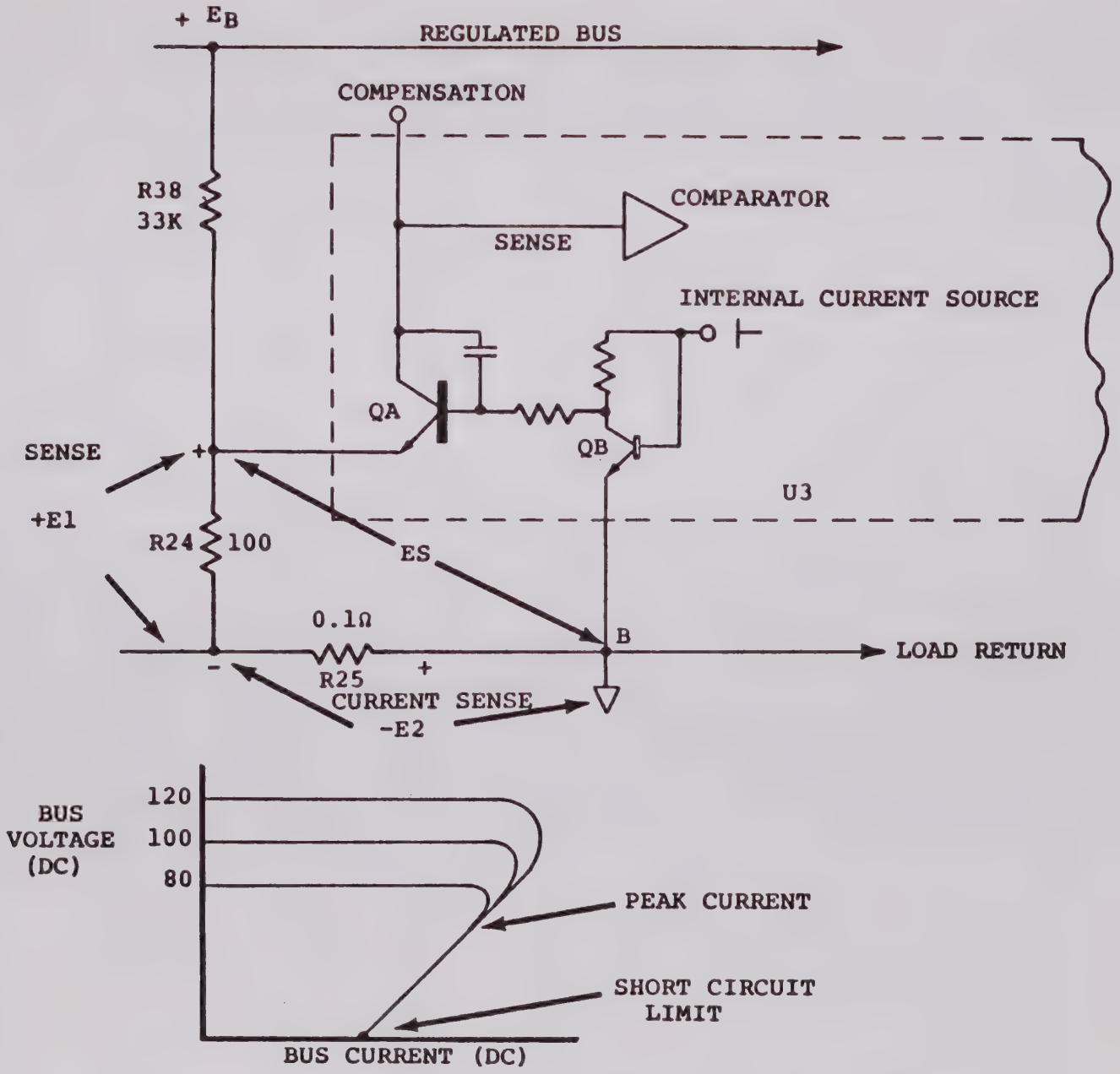

FIGURE 4-12 SIMPLIFIED SCHEMATIC-SWITCH REGULATOR CURRENT LIMITER

4.3.2.6 Power Converter Drive. The function of this circuit is to convert the regulated DC bus generated by the switch regulator into a regulated 20 KHz AC BUS that is then applied to the High Voltage transformer of the High Voltage Assembly. The Power Processor PCB Assembly generates both the regulated DC bus and the low voltage power converter drive signals. The Power Converter transformer is part of the High Voltage Assembly.

U4 is the same IC as U3. U4 is set up to generate a 20 kHz output on both U3CA and U3CB. This frequency is established by C34 and R55 and is also used to synchronize U3. The combination of R50 and R51 estasblishes a four microsecond dead time to assure time separation of the two out-of-phase pulse signals on U3CA and U3CB.

U4 includes a shut-down feature (pin 10). When U4-10 is high the output of U4 turns-off. Op Amp U2 controls the signal on U4-10. ICs U3 and U4 both incorporate an internal +5V reference. The reference voltage of U3 is sensed by U2C (pin 9). The other comparator leg of Op Amp U2C (pin 8) is connected to the output stage of optical coupler U6. When U6 is energized, U6-4/5 acts as a switch and connects U2C-8 to +12 VDC.. A high voltage ON command (a logic high) turns-on U6. A logic high on U2C-8 forces the output of U2C low (pin 14) and allows U4 to generate the 20 kHz outputs on U4-CA/Cb. The 20 kHz signals from U4 are fed to two pairs of amplifiers (Q8, Q9, Q10, Q11 and Q12, Q13, Q14 and Q15). The outputs of these stages are two high current 20 kHz outputs that are connected to the High Voltage transformer of the HV Assembly.

4.3.2.7 Line and Bias Voltage Monitors. Low line and bias overvoltage detection circuits are included in the Power Processor PCB Assembly. The sense line of U2D (pin 10) is connected to the output of CR2 (approximately 25 VDC) and dropped to about 6.5 VDC by resistor R39 and R40. The reference input of U2D (pin 11) is connected to the +5 VDC reference of U3. As long as the sense line stays high, the output of U2D (pin 13) stays low and holds Q7 off.

If U2D-10 goes low, Q7 turns on, pulls the compensation input (pin 9) of the error amplifier of U4 low, and shuts-off the output of U4. When the output of U2D-2 goes high, it also energizes U7, which generates a low line fault signal that goes to the logic board fault detector.

U2B-6 monitors the switch regulator bus when the bus voltage goes too high (over 115 VDC), the output of U2B-1 goes low which pulls the sense lines of U2A-10 low and the output of U2A-13 goes high which energizes U7.

4.3.2.8 Low Voltage Supplies. The Power Processor PCB Assembly provides the four low voltage bias supplies required for the TWTA. These supplies operate in pairs. Two (+12 VDC and ±5 VDC) are driven by the secondary of transformer T2 and CR2, two (+12, +15 VDC) are connected to output of CR3.

The nominal output of CR2 is 12.7 VDC which is applied to a pair of capacitors (C7, C8) and regulators U11 and U12 to develop +5 V and -5 VDC, respectively. The junction of C7 and C8 is tied to the center tap of the secondary of transformer T1 (-7 VAC) which provides the base drive voltages for the converter transistors Q11 and Q12.

The voltage between 1T2-7 and 1T2-8 is applied to a voltage doubler formed by C4, C6 and diodes CR6, CR8, CR7. The output of the doubler is about 25 VDC which is sensed through resistors R39 and R40 by low-line detector U2D-10. This voltage is applied to regulator U10 to develop the 12 VDC bus used to power switch regulator ICs U3 and U4.

The other secondary of 1T2 is connected to CR3 and generates an output voltage of approximately 25 VDC which is applied to regulators U13 and U14. U13 supplies a regulated 15 VDC bus for the cooling fan. U14 provides +12 VDC for the input current limiting circuits, the HV feedback circuits and the Remote Control interface.

4.3.3 Logic PCB Assembly (A2) Functions

NOTE

In the following discussion of the Logic PCB Assembly, all reference designations are preceded by 1A3, e.g., the correct designation for R1 is 1A3R1.

The Logic PCB Assembly provides the following functions:

a. Filament Time Delay Timer
b. High Voltage Control
c. Fault Detection
d. Local Status Displays
e. Remote Control and Indicator Interface
f. AC Prime Power Control
g. Local/Remote Operation Mode Selection

Refer to the Fault Logic and Timer schematic (Section 6) for the following discussions.

4.3.3.1 Basic Circuit Element. The design of the logic circuits is based on the use of a current differencing amplifier (CDA). The symbol for a CDA is shown in Figure 4-13a. A simplified schematic and equivalent circuit are also shown in Figure 4-13a. The current mirror portion of the circuit (Figure 4-13b) is such that current on the plus side (non-inverting input) acts as a current source at the minus (inverting input). The CDA operates in such a manner that the minus side current equals the plus side current.

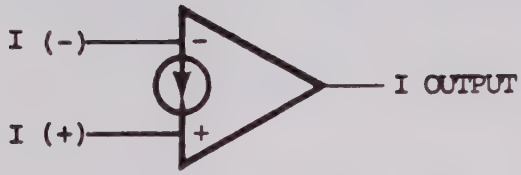

a) ENGINEERING DRAWING SYMBOL

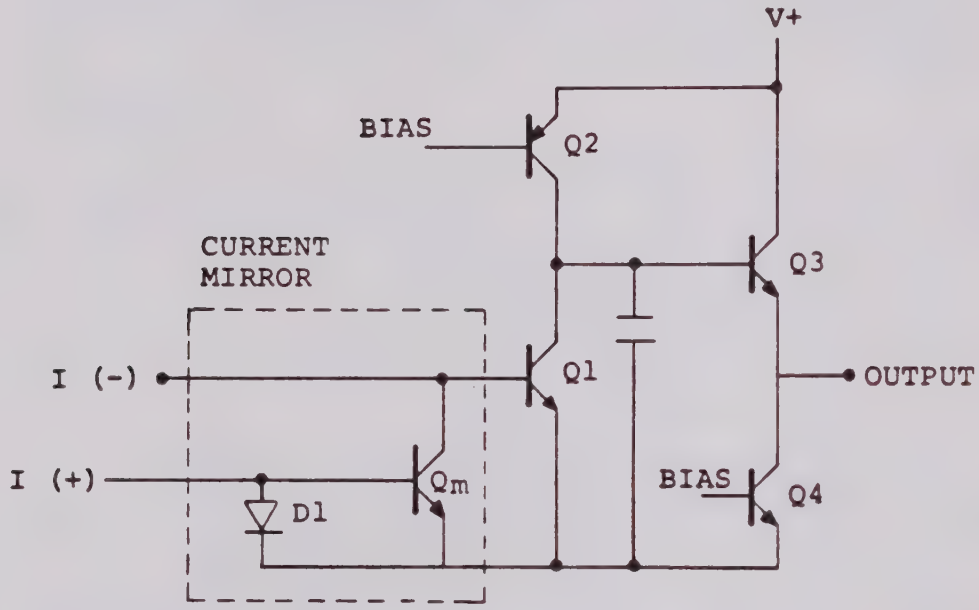

b) SIMPLIFIED SCHEMATIC

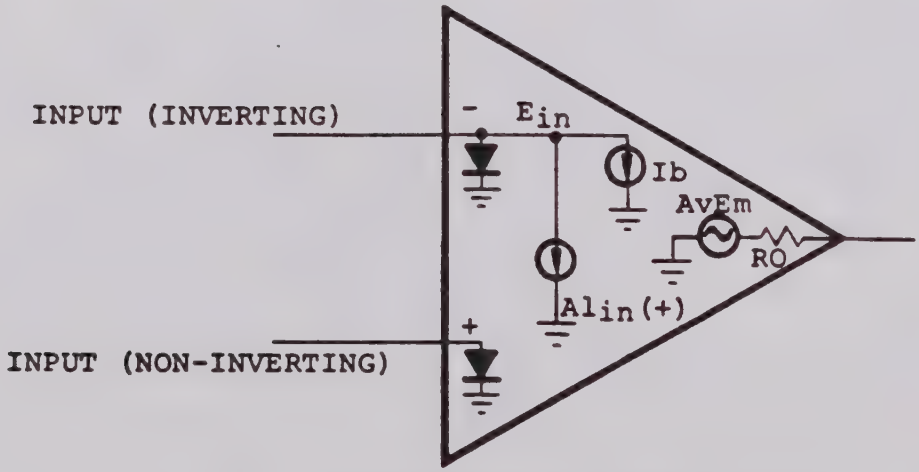

c) SIMPLIFIED EQUIVELENT CIRCUIT

FIGURE 4-13 CURRENT DIFFERENCING AMPLIFIER (CDA)

As a result the voltages at the two inputs of the CDA are essentially constant. This is different from the conventional Op Amp used as comparators where changing voltages are compared. When the CDA input current varies (rather than the input voltages) the CDA output changes state.

In Figure 4-13(c), the minus (-) CDA input is designated as an inverting input while the plus (+) CDA input is designated as the non-inverting input.

An increase in current on the plus (+) CDA input (logic high) causes the output of the CDA to go high if the circuit is designed to normally operate with I(+) less than I(-) and will set the CDA output low. In this case, an increase in the magnitude of I(-) does not cause the output to shift. However, if the value of I(-) is decreased to the point where I(-) is less than I(+), the CDA output will go high (i.e. the input on I(-) line is inverted). Consequently, the CDA can be set up for a reference on either leg (depending on whether one wants an inversion of the incoming signal or not).

Resistors in series with the two input lines are used to establish the magnitude of current in each input and to set the threshold for logical output shifts.

The LM 3900, which is the CDA used in the TWTA, consists of four independent, dual input, internally compensated amplifiers which operate with a single power supply and provide a relatively large output voltage swing.

In Figure 4-14, U6A of the Logic schematic is used to monitor the interlock switches. When the normally open cover interlock switch is in the normal operation position, it is held closed by the top cover. This shorts the junction of the 100K resistors controlling the (+) input to the logic supply return. As a result, the input current in the U6A minus leg through the 300K resistor (R7) is greater than that in the plus leg (essentially zero). When the top cover is removed, the interlock switch opens and allows the (+) leg of U6A to draw more current than the minus leg, I(+) = 1.5 I(-). U6A attempts to drive the current in the minus leg to match that in the plus leg so that the differential current is nearly zero which changes the U6A output from a logical low to a logical high. The U6A output is used to drive the summary fault detector (U1C) and to drive local and remote indicator drive circuits.

4.3.3.2 Filament Time Delay Timer (FTD) The FTD circuits include a Timer (U3A), a clock, and a status detector. The nominal time delay is three minutes which allows the TWT Filament sufficient time to heat up and stabilize. When AC power is applied, 12 VDC is impressed on R11 which controls the current to the (+) input of U3A. At this point I(+) is higher than I(-) and the output of U3A drives positive until the current in IC-7 is equal to I(+). Since C7 is discharged at the time power is applied, I(-) is essentially zero. U3A drives enough current through C7 to keep I(-) equal to I(+). It is, in essence, a constant current source charging C7. The output of U3A (if viewed with respect to time) is a ramp. During the charging cycle, the current in the (+) leg of U3B is less than that in the (-) leg of U3B. The (-) current input to U3B is controlled by variable resistor R14. At a certain point, the current applied to the (+) leg of U3B exceeds that in the minus leg and the output (U3B-5) goes high signifying that the time delay period is over. Adjustment of R14 so that I(-) is lower would result in shorter time delays and vice-a-versa.

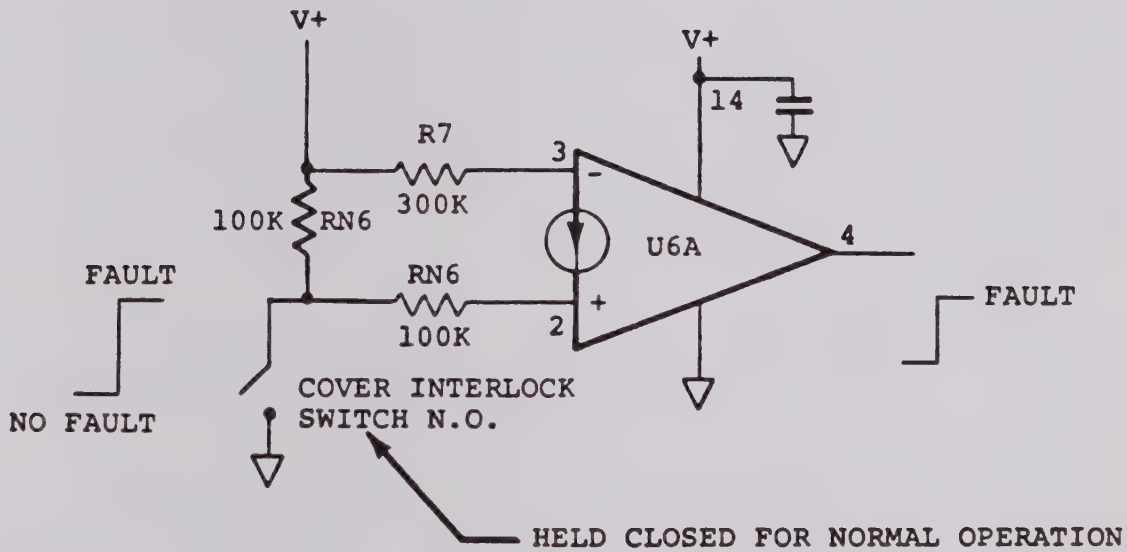

FIGURE 4-14 INTERLOCK CIRCUIT MONITOR LOGIC U6A

1043-1/85

When the output of U3B goes high, it drives the current on the sensing input of U1D high which drives the U1D output high and signals the rest of the logic (via CR6 and U1B) that FTD is complete.

Note that whenever the prime power is on, the current controlled by R11 is a constant value. If prime power is interrupted, I(+) to U3A falls to a value less than I(-) and the output of U3A goes low. When this happens, C7 discharges through U10 at a rate equal to twice the charging rate. Therefore, if power is interrupted for 20 seconds and then restored, the FTD circuits will indicate FTD in progress for the 40 seconds it takes to recharge C7. For a three minute cycle, outages of less than 90 seconds will result in proportional delays and as the full three minutes for outages greater than 90 seconds.

4.3.3.3 High Voltage Control The HV ON/OFF control signal from the logic to the TWTA supplies is brought out on the output of U4 pin 4. U4 is a multi-transistor chip with transistors used as switches. When these transistors are on, the collector is pulled high (to 12 VDC minus the drop in the transistors), and is used as a control signal or to drive an associated indicator. U4-4 actuates the HV ON/OFF control and indicator U8/16. The signal on U4-6 is controlled by the output of U1B (pin 5). U1B-5 also controls U1A which controls the standby indication. U1A is also connected to the FTD status detector U1D via R13.

When the U1B sensing line I(-) signal is inverted, i.e. when the current to U1B-6 goes high, U1B-5 goes low.

NOTE

Where the sensing lines go to the I(+) input, a fault is indicated by the line going high and the CDA output going high. When the sensing lines go to the I(-) input, a low on the line indicates a fault and the CDA output goes high.

Each CDA has input resistors to establish the no-fault/fault currents. The resistors (coupling the outputs to the inputs for the non-inverting circuits) are used to provide the proper operating characteristics.

Diodes CR2, CR3, CR4 and CR5 form an OR circuit that is connected to the inverting sense line of Summary Fault Detector U1C. (U1C-8) If any one of the fault detectors go high, the output of U1C is driven low.

U1B-6 senses the output of U1D-10 via CR6 and the output of U3D-10 via R10, RN5 (12,3). U3D also has an inverting sense line (U3D-11) that is normally high (HV OFF) and pulled low (HV ON) via S1 in the local mode or via an external command in the remote mode (if the TWTA incorporates the remote option). Jumper 3 is installed when the TWTA does not include the Remote Control option.

4.3.3.4 Fault Detection Logic. CDA U6C, U6D, U6A, and U3C are used to detect the following individual faults:

FAULT	DETECTOR CDA
Helix Current Overcurrent	U6C
Low Line Voltage	U6D
Interlock Open	U6A
TWT Overtemperature	U3C

4.3.4 High Voltage Assembly (A1)

NOTE

In the following discussion of the High Voltage Assembly, all reference designations are preceded by A1, e.g. the correct designation for R1 is 1A1R1.

The High Voltage Assembly contains the filament (heater) supply and the high voltage supplies.

4.3.4.1 Filament Supply. The purpose of this circuit is to provide a low voltage regulated bus of 6-7 VDC that can operate in conjunction with a high voltage supply. 115 VAC is routed to J5-1, J5-2 from the prime power interface circuits. The AC supply voltage is then distributed within the High Voltage Assembly to J3-12, J3-13 and J4-2, J4-3. Heater transformer T3 is connected to J3-12, J3-13. The secondary of T3 is routed to J3-1, 2, and 3 with J3-1 being connected to the center tap of the secondary of T3. The 18 VAC output of T3 is rectified by CR1, CR2, filtered by C1, C9 and connected to regulator U1. Variable resistor R1 is used to adjust the output to the value (6-7 VDC) desired. Diode CR3 provides protection against transients which might be induced by TWT arcs. Capacitor C2 filters the output of U1. Zener VR1 limits the maximum output of U10 to 7.5 VDC.

4.3.4.2 High Voltage Supplies. This set of circuits provide the high voltages for the TWT helix and collector. The helix voltage is determined by the collector and cathode supplies. The output of the Power Processor PCB Assembly is a regulated 60-115 V 20 KHz bus which is applied to the primary of high voltage transformer T2.

One secondary of T2 (34, 32, 30) is equipped with multiple taps (see schematic D134993) to provide different ratios of HV between cathode to collector and cathode to helix. The selected output is applied to a full wave high voltage rectifier consisting of CR8, CR9, CR10 and CR11. The output of this bridge is filtered by C6.

The other secondary (24, 27) provides the cathode to collector voltage. This voltage is applied to a full wave bridge consisting of high voltage diodes CR4, 5, 6 and 7. The output of this bridge is filtered by C3. Resistors R4, R5, R6 and R7 are used to limit

the secondary currents of transformer T2. The collector voltage is filtered by L1 and C5. A spark gap is connected across Choke L1.

The filtered HV outputs across C3 and C6 are added together to provide the cathode to helix voltage whose magnitude is controlled by 1A2R33 on the Power Processor PCB Assembly.

The cathode voltage is sensed via R19 and fed to the feedback amplifier of the Power Processor PCB. CR12 clamps this feedback point to near ground potential. R19 is in series with two resistors on the Power Processor PCB Assembly, 1A2R18 and 1A2R19. (See Section 3.3.2.5 for a discussion of HV Feedback).

4.3.5 Grid PCB Supply (A5)

NOTE

In the following discussion of the Grid PCB Supply, all reference designations are preceded by A5 e.g., the correct designation for R1 is A5R1.

The Grid Supply is only used with certain tubes and provides regulated positive or negative (with respect to the cathode) voltage as required. 18 VAC from the High Voltage Assembly is applied (at J1-12, J1-13) to transformer T1. The secondary of T1 is connected to full wave rectifier bridge CR1 and then filtered by C1. One side of the bridge output is connected to the helix via R11 and R14., The voltage across C1 is impressed on a resistor string consisting of R16, R2 and R1. The voltage across R16 is brought out to the grid and collector through Q2 which controls the magnitude of the voltage. This voltage is selected via variable resistor R7.

4.3.6 Anode Supply (A6)

NOTE

In the following discussion of the Anode Supply, all reference designations are preceded by A6, e.g., the correct designation for R1 is A6R1.

The Anode Supply is a simple, adjustable DC supply. 115 VAC routed via the High Voltage Assembly is applied to transformer T1 via pins J1-2, J1-3. The secondary output is rectified by full wave bridge CR1 and filtered by C1 to develop a supply voltage of about 480 VDC. The combination of Q1 and Q2 is used to set the current through R1, R2 to establish the desired output voltage. This voltage is adjustable via variable resistor R3 from 0 to 300 VDC. Capacitor C2 provides additional filtering and R6 limits the current that can be drawn by the anode.

4.3.7 Remote Control Interface Option

Refer to the Logic Schematic and Figure 4-15. Indicator outputs that duplicate and supplement the Front Panel displays are provided by A3U5, a multi-transistor chip. These outputs are referenced to the TWTA chassis ground. In addition, a +12 VDC bus is provided to power external indicators. The other interfaces provided are an external interlock circuit (J2-3) that is connected in series with the TWTA interlock circuit; Remote Prime Power ON Control (J2-4); Remote HV ON/OFF (J2-9); and a Remote/Local Select Switch. The status outputs are represented by an "ON" condition of the open-collector transistors in A3U5. For example, when the HV is turned-on, J2 is pulled low with respect to ground. External Interlock and HV ON control is via contact closures to ground (J2-11). External +12 VDC (reference to chassis ground) should be connected to Remote Interface pin 4 to provide remote prime power-on function. Refer to Figure 4-15 for a typical hookup. For certain applications, the customer may wish to defeat one or more of the external control functions while maintaining others.

This can be accomplished by installing the appropriate jumper as noted below:

Jumper #1, when installed, defeats the external interlock function.

Jumper #2, when installed, defeats the external POWER ON function.

Jumper #3, when installed, defeats the external HV ON function.

Instructions for installing or removing LOCAL operation jumpers in K-Series TWTAs:

1. Disconnect power cable from the rear of amplifier.

2. Unscrew the two screws holding top cover in place and remove the cover.

3. Refer to Drawing 135018 in the manual for the exact jumper location. Locate and install or remove jumpers #1, #2, and #3 from Logic PCB which is located behind the front panel. For full remote operation, remove all three jumpers (leave jumper 4 in position A).

4. Replace the top cover and fasten with original hardware.

5. Reconnect the power plug.

4.4 DETAILED DISCUSSION OF RF SECTION

A functional block diagram of the RF Section including all the standard options is presented in Figure 4-16. The "K-Series"

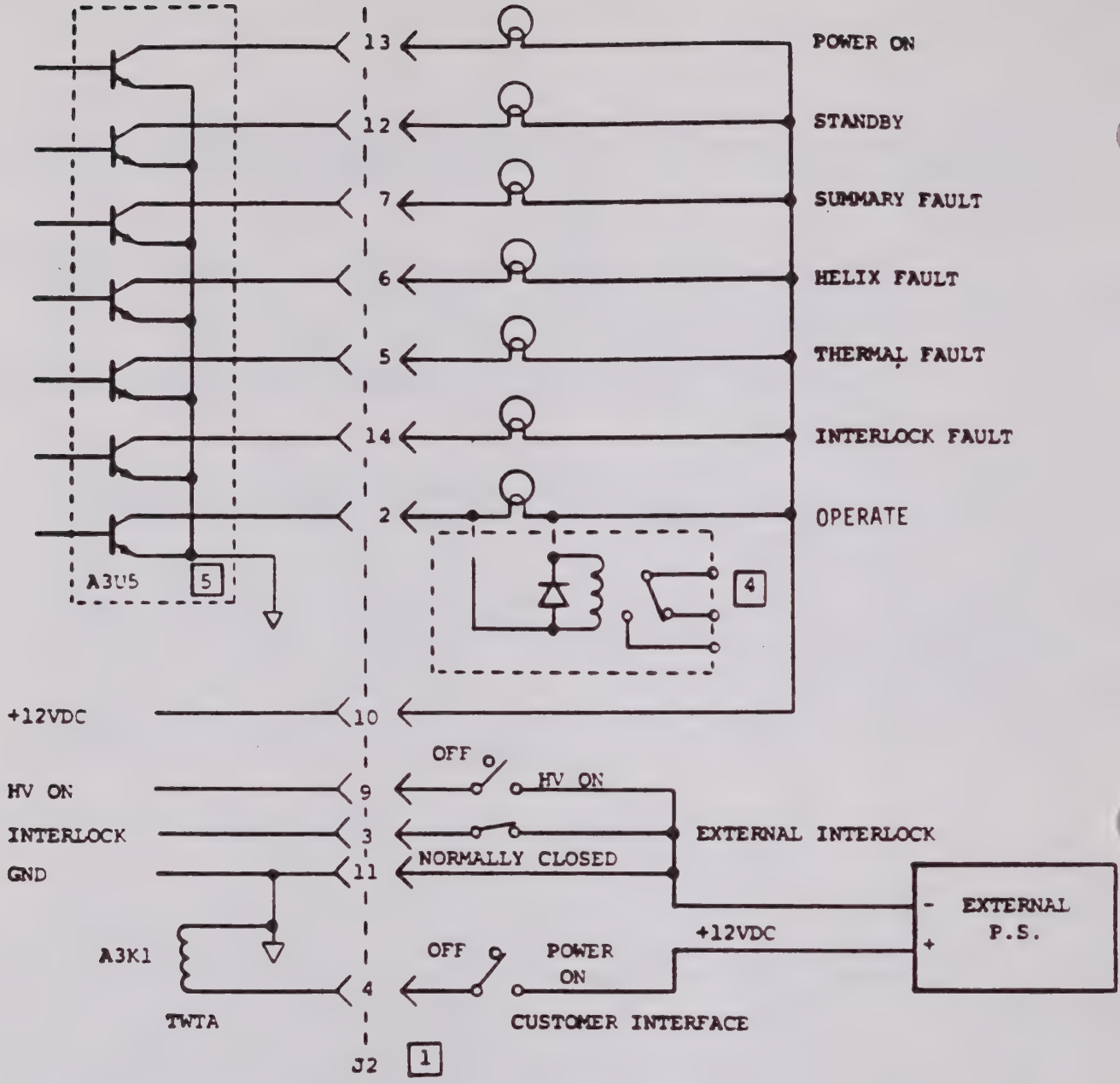

NOTES:

1. J2 IS LOCATED ON THE REAR PANEL.
2. LOCAL/REMOTE SWITCH ON THE REAR PANEL MUST BE IN REMOTE POSITION TO ENABLE CONTROL OF REMOTE POWER ON AND REMOTE HV ON.
3. IF EXTERNAL INTERLOCK SWITCH NOT USED, CONNECT A JUMPER BETWEEN J2-3 AND J2-11.
4. STATUS OUTPUTS MAY BE USED TO OPERATE RELAY COILS. DISCHARGE DIODES MUST BE CONNECTED ACROSS COILS IN THIS CASE.
5. A3U5 IS ULM2081A (SPRAGUE). IT'S MAXIMUM RATING IS: COLLECTOR TO EMITTER VOLTAGE, 14 VDC AND CURRENT 30 mADC.

FIGURE 4-15 TYPICAL REMOTE CONTROL INTERFACE

1044-1/85

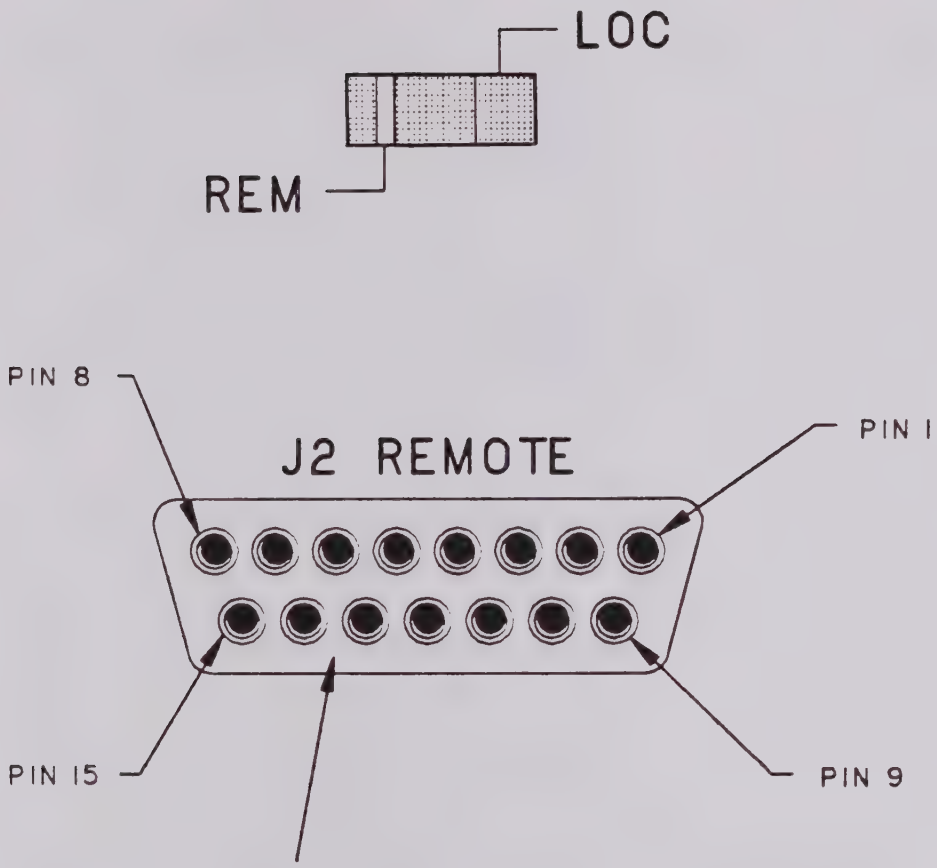

FIGURE 4-15-(1)

REMOTE INTERFACE CONNECTOR AND SWITCH

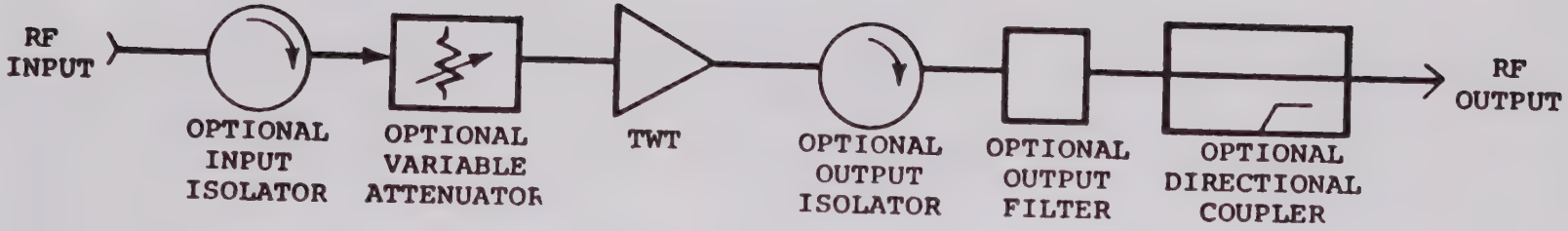

FIGURE 4-16 RF SCHEMATIC

amplifier covers a relatively wide range of frequencies. The specific tube types available are summarized in Table 1-1.

4.4.1 Optional Input Isolator

The optional Input Isolator provides isolation between the input source and the TWT. Typical input VSWR is 1.5 : 1.

4.4.2 Optional RF Attennuator

The Optional variable RF Attenuator control provides a zero to 20 dB continuous variation in RF gain of the TWTA. This is connected between the RF input port and the TWT input and may be used to set the level of the RF output power.

4.4.3 Optional Harmonic Filter

The Optional Harmonic Filter reduces carrier harmonic outputs from the TWT to typically 60 dB below the carrier. It is installed in the output circuit between the TWT and RF output.

4.4.4 Optional RF Output Sample Port

When this option is installed, the RF output passes through the RF directional coupler. Here, a -30 dB sample is taken and cabled to the front panel RF sample port. This permits accurate power monitoring of the output power on the TWTA.

4.4.5 Optional Output Isolator

The optional Output Isolator isolates the TWT output from the TWTA load. This results in improved performance of gain variation vs frequency and protection for the TWT. The isolator integral load is capable of dissipating full reflected power from the TWTA load.

TOTAL SERVICE SUPPORT

Any Place You Need It.

VARIAN MICROWAVE EQUIPMENT DIVISION

GLOBAL SUPPORT. Can a company be big and still be *responsive to your needs?* The truth is one company can and is. Varian Microwave Equipment Division's service for satcom and instrumentation amplifiers literally covers the globe 24 hours a day.

PERSONALIZED SERVICE. VMED makes it easy for you to do business with us. Call any one of Varian's centers from anywhere in the world for experienced field service and product specialists to assist you by telephone or on-site.

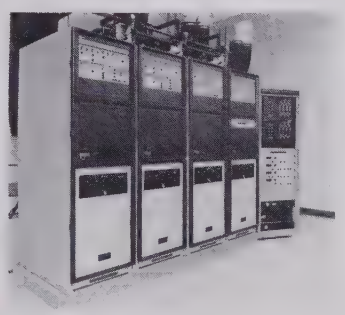

RAPID SHIPMENT. Varian's size means we have the resources to support you with an inventory of factory approved replacement parts at our strategically located depots around the world. And you'll get 24-hour turnaround time on emergency spares. ***RESPONSIVE.*** We're more than just a big company. We're totally responsive to meeting your service support needs *in a very personal way.* Get the world's best support by calling Varian MED.

varian

24-hour-a-day Technical Assistance Center: In the USA and Canada call: 1-800-231-4818. Outside USA and Canada call: 1-415-330-8214. 24-hour-a-day parts and service: 1-800-338-VMED.

Varian leads the way...again.

Headquarters 3200 Patrick Henry Drive, Santa Clara, CA 95054, TEL 408-496-6273. **Asia/Pacific** Varian Microwave Equipment Ltd., Singapore TEL 65-225-0011. **Europe/Mideast/Africa** Varian Benelux B.V., Amsterdam, TEL 31-20-10-47-05. **The People's Republic of China** Nanjing, TLX 342202CJVMS

SECTION 5

MAINTENANCE

5.1 GENERAL

This section discusses preventive maintenance, RF output power checks, adjustment and calibration, troubleshooting procedures, and removal/replacement procedures.

In the event that repair and/or modification to this amplifier is not performed by Varian or under Varian's direction, the warranty of the unit may be voided at Varian's sole discretion. See warranty information included at the rear of this manual.

If the system is not operating properly, and if you cannot or do not intend to service it yourself, contact your nearest Varian field office for assistance.

****
WARNING
****

LETHAL VOLTAGES UP TO 5 KV ARE PRESENT WHEN POWER IS APPLIED TO THE SYSTEM. BE EXTREMELY CAREFUL WHEN WORKING INSIDE THE UNIT. USE ONLY ONE HAND TO MAKE MEASUREMENTS OR ADJUSTMENTS. IF POSSIBLE TURN-OFF POWER BEFORE MAKING ADJUSTMENTS. DO NOT ATTEMPT TO REPAIR OR TROUBLESHOOT THIS UNIT UNLESS YOU HAVE HAD EXPERIENCE IN SERVICING BOTH MICROWAVE AND HIGH VOLTAGE SYSTEMS AND HAVE READ THE GUIDELINES IN THE SUPPLEMENTARY DATA SECTION OF THIS MANUAL PERTAINING TO HIGH VOLTAGE AND MICROWAVE RADIATION.

****

Before applying power to the unit, verify that a suitable RF load (adequate to handle up to twice rated power without damage and with a maximum VSWR of 1.5 : 1 over the entire power amplifier operating range) is provided at all times. Operation of the system without a suitable load can damage or destroy the TWT.

****
CAUTION
****

Before applying the prime power, be sure to terminate the RF input and output.

****

5.2 TEST EQUIPMENT REQUIRED

Table 5-1 lists test equipment required to perform the maintenance routines described in subsequent sections. Equipment with equivalent accuracy or capacity may be substituted.

5.3 PREVENTIVE MAINTENANCE

Preventive maintenance includes periodic visual inspection, routine cleaning, and those regularly scheduled service.

As a major aid to maintenance, it is recommended that an operations logbook be kept for the equipment. This logbook should be used to record all meter readings daily and should note all preventive and corrective maintenance operations. Experience has shown that analysis of long term changes in operational conditions is of great value in predicting and avoiding potential failures, and in quickly analyzing the cause of failures.

TABLE 5-1

TEST EQUIPMENT REQUIRED

DESCRIPTION	MANUFACTURER	MODEL
Sweep Signal Generator	Systron Donner/Kruse	540 with correct plug in for frequency range.
Coaxial Termination	Narda	369BNM/NF
Waveguide Termination	Waveline	781
Directional Coupler	Narda	3040-3045 Series
	Hewlett-Packard	P752 series 10 dB & 30 dB
Power Meter	General Microwave	460B
Frequency Meter	Nytek	9011-A
Variable Attenuator	Merrimac	AU15A
	Hewlett-Packard	P382A
DVM	Data Precision	248
Volt-Ohm-Milliammeter	Triplett	630
Oscilloscope	Tektronix	475
Differential Voltmeter	Fluke	895A
H.V. Divider	Fluke	80 F-15
Clip-On Milliammeter	Hewlett-Packard	412A
Power Supply	Hewlett-Packard	723A

5.3.1 Visual Inspection

At periodic intervals, the TWTA should be inspected to permit early detection of wear or damage which, if properly corrected, will prevent equipment malfunction or failure. Inspections should include, but need not be limited to, visual checks for wear, breaks, deterioration, fungus, excess moisture, mounting integrity, and other similar defects. In a normal environment, inspection should be made at 90-day intervals. If the equipment is subject to severe environmental conditions, such as dusty input ambient air, wide temperature extremes, or excessive shock or vibration, inspections should be performed on a weekly or monthly basis. Visual inspection items are listed in Table 5-2.

5.3.2 Routine Cleaning

The necessary materials and outline procedures for cleaning the TWTA are listed in Table 5-3.

****
WARNING
****

TURN-OFF ALL POWER BEFORE ATTEMPTING ANY CLEANING OPERATION. WHEN USING SOLVENTS BE SURE TO PROVIDE ADEQUATE VENTILATION AND AVOID BREATHING THE FUMES. WHEN CLEANING WITH AIR, WEAR SAFETY GOGGLES AND USE CLEAN, DRY, COMPRESSED AIR, NOT EXCEEDING 25 PSI.

****

TABLE 5-2

VISUAL INSPECTION ITEMS

ITEM	POTENTIAL FAULT	CORRECTIVE PROCEDURE
Connector Plugs	Damaged or improperly seated in mating connectors	Replace connector plugs, properly seat replacement plug
Electrical Wiring	Broken, burned or pinched	Repair or replace defective wires
Soldering Connection	Corroded, cracked or dirty	Clean and resolder connections
Dirt or Moisture Buildup	Short circuits, arcing, corrosion	Cleaning (See Table 5-3)
Chassis Slides	Slides damaged or not sliding freely	Cleaning (See Table 5-3)

TABLE 5-3

ROUTINE CLEANING PROCEDURE

ITEM	PROCEDURE
Chassis	Clean with lint-free cloth, small vacuum cleaner or low pressure compressed air (25 psi, maximum).
Wire Bundles and Wiring	Clean with a soft-bristle brush, small vacuum cleaner or compressed air if available.
Connector Jacks and Plugs	Remove dust and dirt with soft-bristle brush or lint-free cloth.
Circuit Boards	Clean with dry, soft-bristle brush, small vacuum cleaner, or low-pressure compressed air.
Solder Connections	Remove dirt, oil and/or excess flux with isopropyl alcohol. Remove corrosion by lightly burnishing with crocus cloth and clean with a lint-free cloth.
Waveguide Assemblies, Clamps, Cables and Rubberized or Plastic Parts	Clean with a lint-free cloth moistened with warm water and soap solution; rinse with clean water and dry. Use low-pressure air, if available.
Chassis Slides	Clean with Isopropyl Alcohol. Lubricate with Lubriplate No. 110 or equivalent.

5.3.3 Lubrication

The optional chassis slides should be lubricated annually. Clean the slide mechanism with an approved solvent such as isopropyl alcohol. Use a small stiff-bristled brush to apply a light coat of Lubriplate No. 110 (or equivalent) to the slides. Wipe off excess lubricant with a clean lint-free cloth. No other lubrication is required for the TWTA.

5.3.4 Paint Touch-Up

Most finish repairs consist of retouching slightly marred or scratched surfaces. A camel hair brush lightly dipped in a suitable enamel or 26440 gray, Fed-Std-595 will accomplish the touchup desired. Deep scratches, chips, or gouges should first be removed or smoothed by a light sanding with fine (No. 00 or 000) sandpaper and then the surface painted as required to restore the finish.

5.4 RF OUTPUT POWER CHECK

Refer to Table 5-1 for test equipment required. Equipment with equivalent accuracies or capacities may be substituted for testing purposes. Be sure to select equipment that operates in the proper frequency band.

NOTE

This check may be performed at any frequency within the range of your specific TWTA.

a. Turn-OFF AC power.

b. Set up a microwave measurement circuit, such as the one shown in Figure 5-1.

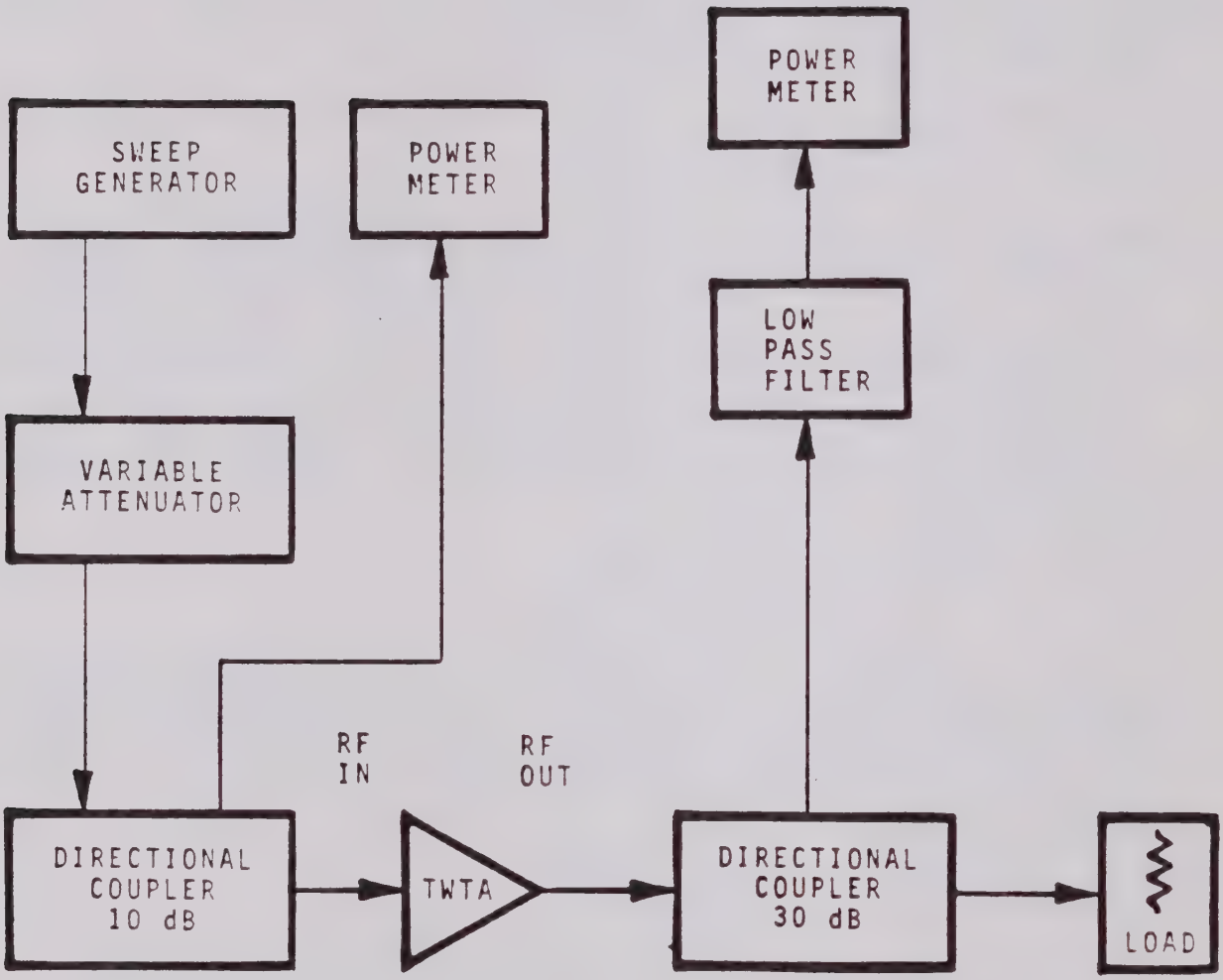

FIGURE 1-5 MICROWAVE MEASUREMENT CIRCUIT

NOTE

If the optional RF Gain Control is installed, turn the GAIN control fully clockwise (cw).

c. Set the output of the microwave signal source to the minimum value.

d. Calculate the limits on RF input microwave power needed to produce the output power specified on the data sheet, taking into account the specified gain. (The actual input power applied to the unit should never be more than 3 dB greater than the calculated value).

e. Turn-ON AC power.

f. Test for gain as follows:

1. Adjust the input microwave power so that the TWTA operates at rated output power.

2. Measure the input microwave power.

3. Calculate the gain. This should match or exceed the gain specified on the TWTA data sheet.

g. Determine saturated output power by adjusting the input power to peak output power. This value should meet or exceed the minimum power level specified on the TWTA data sheet.

h. This completes the RF Output Power Check.

5.5 ADJUSTMENT AND CALIBRATION

Adjustment and calibration of the Power Amplifier is required when the TWT or a major assembly is replaced or after repairs have been made. No adjustment procedure should be attempted until:

a The Theory of Operation Section of this manual is read and the function of the circuits and circuit adjustments are fully understood.

b The guidelines in the Supplementary Data Portion of this manual on High Voltage and Microwave Radiation are fully understood.

****

WARNING

****

LETHAL VOLTAGES UP TO 5 KV ARE PRESENT IN THE POWER AMPLIFIER WHEN IT IS OPERATING. USE EXTREME CAUTION WHEN WORKING INSIDE THE UNIT. AS AN ADDED PRECAUTION, IT IS RECOMMENDED THAT ANOTHER PERSON BE PRESENT TO GIVE AID IN CASE OF ACCIDENT.

****

The unit is designed so that it does not require many adjustments or calibrations. Excluding the optional RF Gain Control, the adjustments are limited to potentiometers on the Power Processor PCB Assembly (A2), the High Voltage Assembly (A1) or the Logic Board (A3). Some internal jumpers are used at the time of equipment manufacture and normally do not require adjustment in the field.

In the Adjustment/Calibration discussions (Section 5.5), the Troubleshooting Procedures (Section 5.6) and the Removal and

Replacement Procedures (Section 5.7), there are frequent references to the need to turn prime power or tube high voltage on and off. Prime power can be controlled from the Front Panel of the unit by pressing the PWR ON/OFF switch in the direction of the desired action. The PWR ON/OFF switch is in the OFF position when the bottom half of the switch is flush with the panel and in the ON position when the top half is flush with the panel. The same is true for the High Voltage (HV) switch. In the procedures, the instruction "turn AC power on" means depress the PWR ON/OFF switch so that the upper half of the switch rocker is flush with the panel. The same short hand notation is used for turning-ON or turning-OFF both the AC power and the high voltage.

****
CAUTION
****

This amplifier uses an off-line regulator to develop the voltages used to operate the TWT. Extra precautions are necessary before the amplifier is serviced. It is suggested that an isolation transformer be used to provide AC power to the amplifier before servicing the unit.

****

5.5.1 Power Processor Assembly Adjustments (See Figure 5-2)

a. Switch Regulator Adjustment (1A2R33).

1. Turn-OFF power switch and wait 30 seconds.
2. Connect DVM across C26.
3. Turn-on AC PWR switch ON and HV Control Switch OFF.
4. Adjust R33 CW until SUM FAULT LED lights at a nominal 120 VDC. Adjust R33 CCW until SUM FAULT light goes out.
5. Adjust R33 for 115 VDC. Adjustment complete.

b. High Voltage Adjustment (1A2R19)

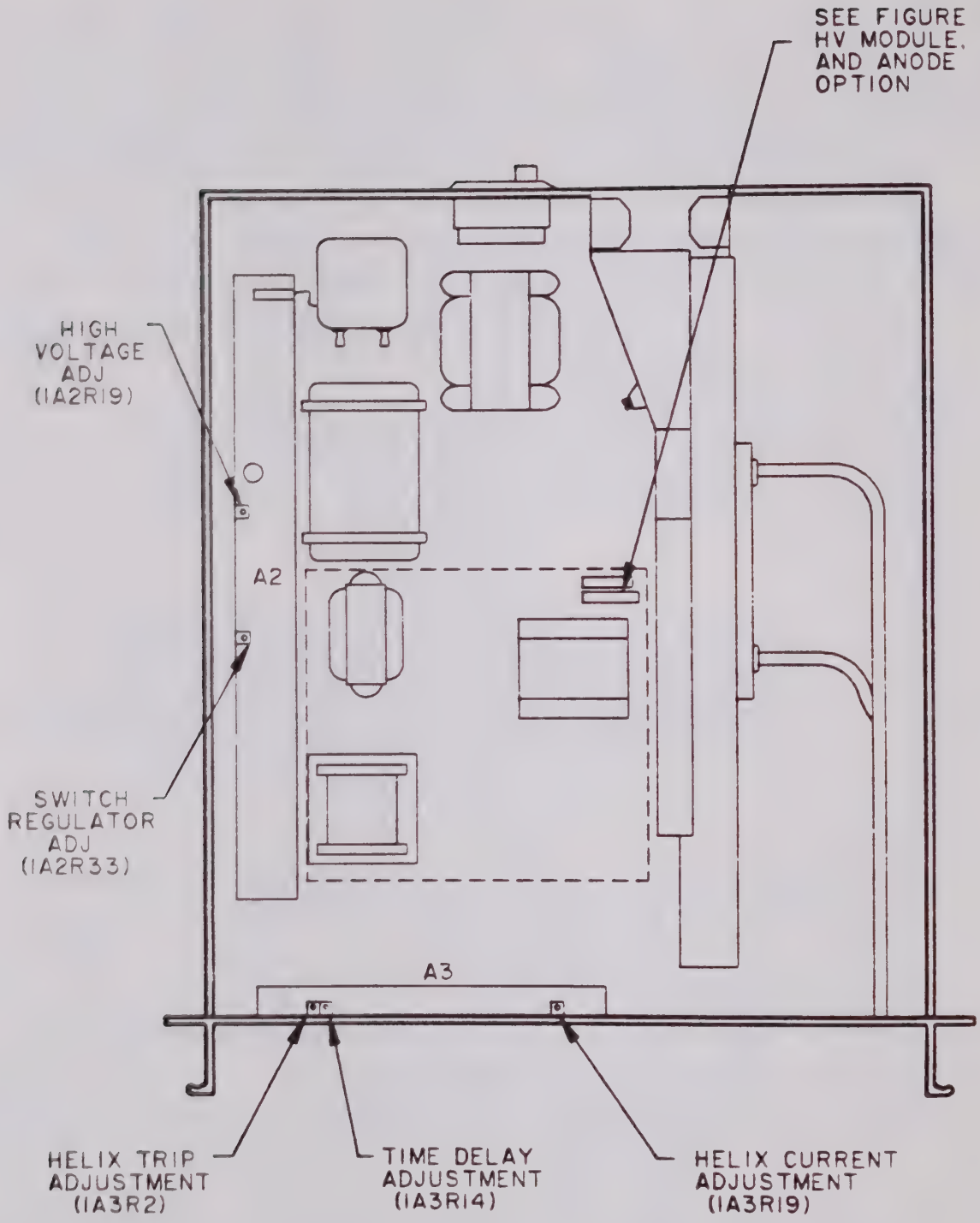

FIGURE 5-2 TWTA TOP VIEW

NOTE

Use a Fluke 80F-15 HV Divider or equivalent for procedures requiring high voltage measurement. Due to the potential High Voltage hazards to personnel, Varian recommends the use of a proven commercial design rather than homemade substitutes.

Proceed as follows: (See Figure 5-3)

1. Turn-OFF AC power. Wait 30 seconds and short 1A1TP1 to chassis.
2. Connect H.V. Divider from 1A1TP1 (high potential lead) to A1TP5 (Gnd lead) and DVM.
3. Check jumper Table 5-4. Refer to the TWT name plate and determine the voltages required for the collector to cathode and cathode to helix. Make sure the jumpers are installed properly according to Table 5-4.
4. Remove TWT connector 1P1 from 1A1J1 and the shorting lead on 1A1TP1.
5. Turn-ON AC power.
6. Wait three minutes until heater time delay is complete.
7. Turn-ON High Voltage.
8. Adjust 1A2R19 until the voltage required on the TWT cathode to helix as measured by the DVM connected to the HV Divider is correct (record this voltage in TWTA log book).
9. Turn-OFF H.V. and AC power and wait 30 seconds. Short 1A1TP1 to chassis.
10. Connect H.V. Divider from 1A1TP5 (ground lead) to 1A1TP3 (high potential lead) and DVM.
11. Remove shorting lead from 1A1TP1.
12. Turn-ON AC power and wait three minutes.
13. Turn-ON H.V. control.

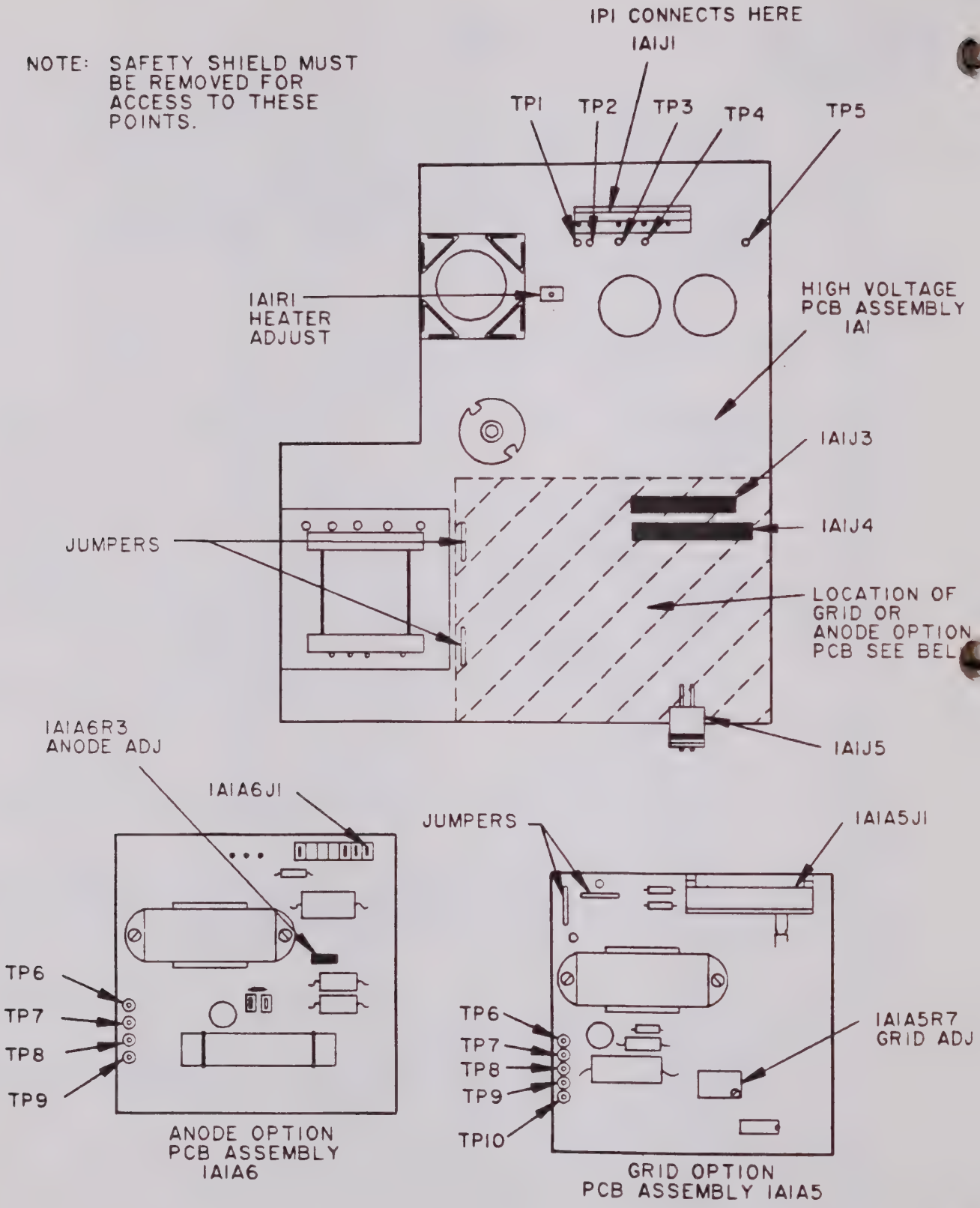

FIGURE 5-3

HIGH VOLTAGE ASSEMBLY TEST POINTS & ADJUSTMENTS

TABLE 5-4

JUMPER TABLE

TWT TYPE	HELIX VOLTAGE ADJUSTMENT RANGE	COLL VOLTAGE	JUMPERS LOCATED ON HV PCB JUMPER	JUMPER
VTL-6140B1	1.2-2.9 kV	99% of Helix	None	None
VTS-6150B1	Helix		None	None
VTS-6150J1			None	None
VTU-6090H1			None	None
VTU-6090A1			None	None
VTS-6055A1	1.6-3.0 kV	65% of Helix	1 to 3	2 to 4
VTH-6079H1	Helix		1 to 3	2 to 4
VTC-6166J1			1 to 3	2 to 4
VTH-6079H6			1 to 3	2 to 4
VTC-6166B1			1 to 3	2 to 4
VTX-6089H3	2.0-3.6 kV	65% of Helix	1 to 3	2 to 4
VTX-6186B1	2.4-4.3 kV	48% of Helix	1 to 3	2 to 5
VTM-6196B1			1 to 3	2 to 5
VTM-6096R1			1 to 3	2 to 5
VTU-6196B2			1 to 3	2 to 5

NOTE: Helix and collector voltages are referenced to TWT Cathode.

14. Read collector to helix volts on DVM connected to the HV Divider.

15. Calculate collector-to-cathode voltage as follows: subtract collector-to-helix voltage reading (step 14) from cathode to helix volts (step 8).

NOTE

The collector voltage is a fixed percentage of the helix to cathode voltage. The percentage values are selected by jumpers located in the HV Module. Refer to Table 5-4 for required jumper positions for various TWTs.

16. Turn-OFF HV. Turn-OFF AC power. Wait 30 seconds and short 1A1TP1 to chassis.

17. Install TWT connector 1P1 on 1A1J1.

18. Remove shorting lead from 1A1TP1.

19. Repeat steps 5 thru 16.

20. Remove test equipment.

5.5.2 High Voltage Assembly Adjustments. (See Figure 5-3)

a. Heater Voltage Adjustment.

1. Turn-OFF AC power and wait 30 seconds.
2. Short 1A1TP1 to chassis.
3. Turn off H.V. control. Remove short from 1A1TP1 to chassis.
4. Open interlock Switch S1.
5. Connect DVM from 1A1TP1 (+) to 1A1TP2 (-).
6. Turn-ON AC power.
7. Wait three minutes. Adjust 1A1R1 to read 6.3 volts $\pm$0.2 VDC.
8. Turn-OFF AC power.
9. Remove DVM.

5.5.3 Optional Anode Adjustment (See Figure 5-3)

a. Turn-OFF AC power.
b. Short 1A1TP1 to chassis.
c. Remove short from 1A1TP1 to chassis.
d. Connect DVM from 1A1TP5(-) to 1A1TP-4 (+).
e. Turn-OFF H.V. switch.
f. Open interlock SW S1.
g. Turn-ON AC power.
h. Refer to TWT nameplate or TWTA data sheet for proper anode voltage value.
i. Adjust 1A1A6R3 to read the voltage required for the TWT.
j. Turn-OFF AC power.
k. Remove DVM.

5.5.4 Optional Grid PCB Assembly Adjustment

****
WARNING
****

GRID ADJUSTMENTS MUST BE PERFORMED WITH H.V. OFF. IF H.V. IS ON, THIS WOULD FORCE THE DVM AND THE ADJUSTMENT POTENTIOMETERS TO BE AT CATHODE (H.V.) POTENTIAL. THE FOLLOWING ADJUSTMENTS ARE MADE WITHOUT TURNING-ON THE HIGH VOLTAGE.

****

a. Turn-OFF AC power and wait 30 seconds.

b. Short 1A1TP1 to chassis.

c. Remove short from 1A1TP1 to chassis.

d. Connect DVM from 1A1TP1(-) to 1A1TP4(+).

e. Turn-OFF high voltage.

f. Open interlock switch S1.

g. Check TWT grid voltage requirement by referring to TWT nameplate on TWT data sheet.

h. Negative adjustment.

1. For negative grid operation refer to Table 5-5 and verify that jumpers 1-2 and 4-5 are installed properly. (See Figure 5-3)
2. Turn-ON AC power.
3. Adjust 1A1A5R7 to read voltage required by the TWT grid as read on DVM.
4. Turn-OFF AC power and wait 30 seconds.
5. Remove DVM.

i. Positive grid adjustment.

NOTE

The measurement of the positive grid voltage involves a safety approach in which the output is set up as a negative grid and the grid voltage is adjusted to read the voltage needed by the tube plus 0.7 volts. Once the voltage is set, the jumpers 2-3, 5-6 are selected to make it a positive grid configuration

1. Set up as indicated in paragraph. 5.5.4 steps a through h. (This starts out as negative grid adjustment).
2. Open interlock switch and turn-OFF high voltage switch.
3. Turn-ON AC power. Refer to voltage required for the positive grid TWT by looking at the TWT nameplate or the TWTA Data Sheet.
4. Adjust 1A1A5R7 to read the voltage required plus 0.7 VDC. For example, if the required voltage is +14 volts, set the voltage measured to -14.7 VDC.
5. Turn-OFF AC power, wait 30 seconds.
6. Remove DVM.
7. Change jumpers from negative grid to positive grid operation. Refer to Table 5-5. Install jumpers 2-3 and 5-6.

NOTE

If the correct voltage is setup in step 4 and the jumpers are not changed as indicated in step 7, the TWT will not turn-on.

5.5.5 Three Minute Time Delay Adjustment

NOTE

This is normally a factory adjustment that does not require further field adjustment.

TABLE 5-5

GRID SUPPLY JUMPERS
(SEE FIGURE 5-3)

	JUMPER ASSIGNMENT	
POSITIVE GRID	3-2	5-6
NEGATIVE GRID	1-2	4-5

a. Turn-OFF AC power. Wait three minutes.

b. Connect DVM from 1A3TP1(-) to 1A3T5(+).

c. Turn-ON AC power switch and note time ON.

d. After three minutes "exactly", read DVM and record this voltage (approximately 7.3 volts).

e. Turn-OFF AC power.

f. Connect DVM from 1A3TP1 to 1A3RN6-9.

g. Turn-ON AC power and adjust 1A3R14 to read voltage recorded in step d.

h. Turn-OFF AC power.

i. Remove DVM.

5.5.6 Helix Current Adjustment

a. Turn-OFF AC power. Remove top cover and leave interlock switch open to prevent the high voltage from turning-on.

b. Connect a DC power supply with a 1K ohm resistor in series with the positive lead across 1A1R9. Connect the negative lead of the power supply to the left side of 1A1R9 and the positive lead to the right side of 1A1R9.

c. Connect DVM across 1A1R9.

d. Turn-ON AC power. Make sure interlock switch S1 is open.

e. Make sure the external power supply is adjusted to zero volts before turning on the external power supply.

f. Turn-ON the external power supply and adjust to read 2.5 VDC on DVM. The front panel meter should read 10 milliamperes (5 segments). If not, adjust 1A3R19 to read 10 milliamperes.

g. Turn-OFF AC power supply and external DC supply.

h. Remove external power supply.

5.5.7 Helix Trip Adjustment

a. Repeat paragraph 5.5.6 steps a through e. (Note, interlock switch is open.)

b. Turn-ON external power supply.

c. Turn-ON H.V. control. Slowly adjust power supply voltage to 2.7 VDC while observing the helix trip fault light on the front panel display. At 2.6 VDC $\pm$0.1 VDC the helix fault light should light.

d. If not, check TWTA data sheet. Steps a-c are set to check a 10 milliampere trip point. Certain tubes require 15 mA trip point. Reduce the external power supply to zero volts DC. Adjust 1A3R2 fully CCW. Turn-OFF HV control and then turn-ON. Leave the HV switch ON.

e. Adjust the external DC supply to read 2.6 VDC $\pm$ 0.1 VDC for 10 milliampere trip point and 3.37 $\pm$ 0.1 VDC for 15 milliampere trip point. Adjust 1A3R2 CW until the helix fault light lights.

f. Turn-OFF AC power.

g. Turn-OFF external power supply and remove connections.

5.6 TROUBLESHOOTING PROCEDURES

The basic philosophy of the procedures in this section is that:

a. Hazards to personnel must be minimized.

b. Fault isolation is only required to the functional circuit block level (skilled technicians only would be servicing the unit).

c. Maximum use should be made of safety and metering features incorporated into the TWTA.

5.6.1 General Fault Isolation

The TWTA incorporates features that facilitate fault isolation on the bench or in an operational configuration.

****

****
CAUTION
****

This amplifier uses an off-line regulator to develop the voltages used to operate the TWT. Extra precautions are necessary before the amplifier is serviced. It is necessary that an isolation transformer be used to provide AC power to the amplifier before servicing the unit. If an isolation transformer is not used, all voltage and scope measurements made on the Power Processor PCB (A2) will force the test equipment to float at the line potential. If the test equipment is grounded, then damage will be induced in the TWTA. If the test equipment is not grounded, the test equipment will be hazardous because it will be at line potential.

****

****

equipment to float at the line potential. If the test equipment is grounded, while an isolation transformer is not used, then damage will be induced in the TWTA. If the test equipment is not grounded, the test equipment will be hazardous because it will be at line potential.

Table 5-6 summarizes the indications that can be used directly for fault isolation. (O) indicates the control is in the OFF position or the LED indication is not lighted. (X) indicates the control or indicator is ON and (XO) indicates it does not make any difference. The column marked CONDITION indicates the status or probable source of the problem. The column marked REFER TO lists procedures or additional tables that require something more than use of the operational controls and indicators.

If there is a problem that was not resolved by the data in Table 5-6, the next logical step whould be to eliminate the low voltage supplies on the Power Processor PCB as the source. This will require a voltage check of the input to and output from four regulators (1A2U10, 1A2U11, 1A2U12, 1A2U13, 1A2U14). Table 5-7 provides the data required to make this check.

****

CAUTION

****

The return for the 1A2U10, 1A2U11, and 1A2U12 supplies is above chassis ground.

****

If the input is OK and the output bad, replace the regulator. If both input and output good, look elsewhere in circuit. If input is bad, remove and replace the bridge (1A2CR3 or 1A2CR2) or transformer (1A1T2) as required.

TABLE 5-6

OVERALL FAULT ISOLATION INDICATIONS
(LOCAL MODE)

CASE	FRONT PANEL SWITCHES: POWER ON/OFF	FRONT PANEL SWITCHES: HV ON/OFF	HELIX METER	PWR ON	LEDS: STD BY	LEDS: OPER	LEDS: SUM FAULT	LEDS: HELIX FAULT	RF OUTPUT POWER	CONDITION OR MOST LIKELY CAUSE
1	X	0	0	X	0	0	0	0	0	Normal during filament time delay.
2	X	0	0	X	X	0	0	0	0	Normal standby.
3	X	X	X	X	0	X	0	0	X	Normal operation.
4	X	X/0	0	X	0	0	X	0	0	Interlocks, or low line fault or logic PCB fault or bus detector fault. See Table 5-7 cases 1, 2, and 3.
5	X	X	0	X	0	0	X	0	0	TWT overtemperature fault.
6	X	X	MOMENTARY	X	0	0	X	X	0	Helix over current.
7	X	0	0	0	0	0	0	0	0	Prime power or fuse or AC PCB or A2U14 or A3S2. See Table 5-7, case 4.
8	X	X	X	0	0	0	0	0	X	Indicator circuits.
9	X	X	X	X	0	X	0	0	0	RF drive or TWT or A2Q11, Q12 and associated circuits.
10	X	X	X	X	0	0	0	0	0	Logic PCB or A3U1 or A3U3. Loose cable 1A2P1.
11	X	X	X	X	0	0	0	0	X	A3U8
12	X	X/0	0	X	0	0	0	0	0	A3U1 or A3U3.
13	X	X	0	X	0	X	0	0	X	A3U7 or A3M1 or A3R19 adjust.
14	X	X	0	X	0	X	0	0	0	A2Q5 or A2U3 or HV assembly. See Table 5-8 cases 1, 2, & 3.
15	X	X	X	X	X	X	X	0	0	A3U8
16	X	X	0	X	X	0	0	0	0	A3S1

X = ON
0 = OFF
X/0 = NO SIGNIFICANCE
0 X = STATE CHANGE

1048-1/85

TABLE 5-7

REGULATOR MEASUREMENTS

REF.DES.	INPUT DVM ON POS	INPUT PINS NEG	INPUT READ VDC *	OUTPUT DVM ON POS	OUTPUT PINS NEG	OUTPUT READ VDC
U10	(1)	(2)	25	(3)	(2)	+12
U11	(1)	(2)	13	(3)	(2)	+5
U12	(1)	(2)	13	(1)	(3)	-5
U13	(1)	(2)	25	(3)	(2)	+15
U14	(1)	(2)	25	(3)	(2)	+12

( ) Pin No. of chip

* Input voltages are unregulated DC. Exact value depends on input line voltage.

5.6.2 Fault Isolation Using Test Equipment

Table 5-8 provides an expansion of some of the items in Table 5-6. The purpose of these procedures is to differentiate between multiple causes defined in Table 5-6. The same symbols are used in Table 5-7 as in Table 5-6. Table 5-7 refers to other procedures as required.

5.6.3 Summary Fault Indication

If the Summary Fault indicator is ON, there is a fault present or the Logic Card is malfunctioning. Proceed as follows:

a. Connect DVM from 1A3TP1 to 1A3TP3. If DVM reads Logic High (approximately 10.5), then a Low Line Fault is present:
   1. Check prime power.
   2. Check Low Line Detector on the power processor, U2 pin 13 and associated circuitry.

b. Connect DVM from 1A3TP1 to Anode 1A3CR4. If DVM reads Logic High (approximately 10.5V), then check interlock switch or check remote interlock option. If Remote Control Option is not installed, make sure jumpers 1, 2 and 3 are installed on the Logic Card.

c. Connect DVM from 1A3TP1 to anode of 1A3CR5. If DVM reads high (10.5 VDC) then check TWT temperature switch on TWT.

   1. If the above checks indicate no faults present, remove and replace U6.
   2. If problem persists, replace Logic Card.

TABLE 5-8

FAULT ISOLATION USING TEST EQUIPMENT

CASE	POWER SWITCH	HV SWITCH	HELIX METER	PWR ON	STD BY	OPER	SUM FAULT	HELIX	RF POWER	TEST EQUIPMENT CONNECTION
1	X	X	0	X	0	X	0	0	0	A2Q5, or A2U3 or HV DVM across C26-Normal 70-120 VDC. Oscilloscope collector of Q11 to collector of Q12, 20 kHz square wave 140-300V pk to pk. If OK remove and replace HV Assy. If square wave not OK and 70-120 VDC across A2C26, check A1Q2, Q11, Q12, U4 and associated circuits. Remove and replace as required. No adj. required after repair. If both square wave and voltage across A2C26 not OK, check A2Q5, A2U3 and associated circuit. Adjust per 5.5.1a after repair of defective components.
2	X	X/0	0	X	0	0	X	0	0	Does not clear fault when HV switch changed to OFF. Check Local and Remote Interlock. If interlock OK place DVM across A2C26. If greater than 120 VDC rotate A2R33 counterclockwise to decrease voltage until summary fault light goes out. If light goes out see Section 5.5.1a for adjustments. If A2R33 adjustment does not change voltage A2Q5 is shorted or A2U3 and associated components are defective. Remove and replace as required. Adjust after repair per section 5.5.1a. If not 1, 2 above proceed per 5.6.3.
3	X	X	0	X	0	X	0	0	X	RF power level incorrect. (erratic, low or high). Could be Sw Reg, Conv, HV Mod. or HV Feedback. See 1,2 above for Sw Reg, Conv. HV Mod for feed back circuit. If erratic refer to 5.6.4. If low or high refer to adjustment procedure 5.5.1b. If this does not solve problem see 5.6.4.
4	X	0	0	0	0	0	0	0	0	DVM across A2U14-2, A2U14-3. Should be 12 VDC. If greater, replace A2AU14. If lower check voltage across A2C5. If 25 VDC +10% replace U14. If correct voltages, check interconnection of PCBs (A2J1). If connection OK check path for short. Refer to schematic.

TABLE 5-8 (Cont'd)

FAULT ISOLATION USING TEST EQUIPMENT

CASE	POWER SWITCH	HV SWITCH	HELIX METER	PWR ON	STD BY	OPER	SUM FAULT	HELIX	RF POWER	TEST EQUIPMENT CONNECTION
5	X	XO	XO	X	XO	XO	XO	XO	XO	Fan does not work. DVM across A2C17. 12 VDC. If low check for 25 VDC ± 1% across A2C5. If OK replace A2C12 or A2U13 or fan B1. (Refer to 5.6.5 for fan replacement procedure.

X = ON
O = OFF
X/O = NO SIGNIFICANCE

Cases 1, 2 and 3 require use of isolation transformer.

5.6.4 Switch Regulator Fault Isolation

a. Turn-OFF AC power. Wait 30 seconds. Short 1A1TP1 to Chassis.

b. Disconnect 1A1P1 from High Voltage Module. (Disconnects TWT).

c. Remove 1A2U5. Removing 1A2U5 removes effects of the HV feedback amplifier.

d. Connect DVM across 1A2C26.

e. Remove shorting lead from 1A1TP1.

f. Turn-ON AC power, wait three minutes.

g. Turn-ON High Voltage and read approximately 120 VDC.

h. If not 120 VDC $\pm$ 5 VDC and 1A2R33 does not adjust the voltage, refer to Table 5-8, items 1 and 2.

i. If 120 $\pm$ 5 VDC, the problem is in the feedback path (U9, Q6, U5 and associated circuits).

j. Turn-OFF AC power and wait 30 seconds. Install 1A2U5.

k. Connect oscilloscope between 1A2U9-6 and 1A2U9-4. Connect DVM to anode 1A2CR12.

l. Turn-ON AC power and wait three minutes.

m. Turn-ON HV.

n. If voltage on the DVM is greater than +3V and less than +7V, adjust 1A2R19 in either direction. Oscilloscope levels should track adjustment. If oscilloscope levels do not track, remove and replace U9. Refer to 5.5.1a. for adjustment procedure after U9 replaced.

o. If replacement of U9 does not solve problem, turn-OFF AC power and wait 30 seconds.

p. Connect a DVM across 1A1CR11.

q. Turn-ON AC power.

r. Voltage across 1A1CR11 should read approximately 9 VDC. If not, turn-OFF AC power, replace 1A1CR11.

s. Short 1A1TP2 to chassis.

t. Check continuity of High Voltage lead from A1E1 to anode of 1A2CR12. If OK, proceed to step u.

u. Check 1A2Q6, 1A2U5 and associated circuit. Repair as required.

v. Remove test equipment and reconnect A1P3.

5.7 REMOVAL AND REPLACEMENT PROCEDURES

5.7.1 Fan Replacement

The fan is mounted on the rear panel of the TWTA and connected to the power supply with a Molex edge connector. If you are not equipped with proper tools to remove and insert the pins of the Molex connector, you will have to cut the leads on the old fan and splice in the new one. Proceed as follows:

a. Turn-OFF AC power, wait 30 seconds and short 1A1TP1 to chassis.

b. Open the wire bundle between the fan and the Molex connector.

c. Remove air duct.

d. Remove the fan red lead pin (1A2P2-14) from the Molex connector with small flat blade screwdriver by pushing lead pin. Remove the fan blue lead from filter FL1-2.

e. Remove fan.

f. Install the new fan and insert the pin in the Molex connector, red to 1A2P2-14 and solder blue to FL1-2

g. Reinstall air duct.

5.7.2 TWT Replacement

a. Turn-OFF AC power and disconnect TWTA from prime power source.

b. Remove top cover from TWTA.

c. Short 1A1TP1 to chassis.

d. Remove 1A1P1 (Figure 5-2).

e. Remove RF semi-rigid cables from TWT RF In and RF Out (Figure 5-2).

f. Place the chassis on its side with TWT above the power supplies.

g. Remove screws on the bottom of TWTA that secure the TWT heatsink to the chassis (9 places).

h. Lay TWTA flat with tube on top and remove TWT Heatsink Assembly.

i. Disassemble TWT from heatsink.

j. Coat the bottom surface of the replacement TWT with thermal compound (Wakefield or equivalent). A thin coat will do.

k. Reinstall tube by reversing steps (e) through (j).

l. Adjust TWT voltages per 5.5.1 b, 5.5.2 (and 5.5.3 and 5.5.4 if the options are installed.

m. Remove shorting lead from 1A1TP1 and replace top covers.

n. Check RF output per section 5.4.

5.7.3 HV Assembly Replacement

a. Turn-OFF AC power and wait 30 seconds.

b. Remove top cover.

c. Short 1A1TP1 to chassis.

d. Remove fiberglass cover from top of H.V. Assembly (A1), Figure 5-2.

e. Remove optional Grid (A5) or anode (A6) PCBs if installed.

f. Disconnect 1A1J3 and 1A1J1.

g. Remove nylon standoffs and one 6-32 screw from HV Assembly (Figure 5-2) and lift out HV PC Board.

h. Install replacement HV Assembly reversing steps d through g.

i. Adjust heater and tube voltages per Sections 5.5.1 b, 5.5.2 (5.5.3 and 5.5.4) as required.

j. Remove test equipment and shorting leads as required.

k. Replace top cover, procedure complete.

5.7.4 Power Processor PCB Replacement

a. Turn-OFF AC power and disconnect prime power.

b. Remove top cover and short 1A1TP1 to chassis. Short the terminals of 1A1C1.

c. Remove 1A2J1, 1A2J2 and 1A2J3.

d. Remove the 8-32 screws (6 places) holding the power Processor PCB to chassis (Figure 5-2).

e. Coat the bottom of the heatsink of the replacement unit with thermal compound (Wakefield or equivalent).

f. Install PCB by reversing above procedure.

g. Adjust per 5.5.1 a and 5.5.1 b.

5.7.5 Logic Card

a. Turn-OFF AC power and wait 30 seconds.

b. Remove top cover.

c. Disconnect 1A3J1, 1A3J2 and 1A3J3 (Figure 5-2).

d. Remove top rail screws (Figure 5-2) one at each end and one in center.

e. Remove top rail.

f. Remove left Front Panel Assembly (Control Indicator Assembly) (Fig. 5-2).

g. Refer to Figure 5-4. Remove cap screw from between PWR ON/OFF and HV ON/OFF switches.

h. Remove two 4-40 nuts from rear of assembly (Figure 5-4).

i. Remove Logic Card from Front Panel. (Figure 5-4)

j. Install replacement Logic Card by reversing steps (a) through (i).

NOTE

Logic Cards are preset at factory.

k. Operate TWTA per Section 2.4. If any problems, check adjustments per 5.5.5, 5.5.6 and 5.5.7.

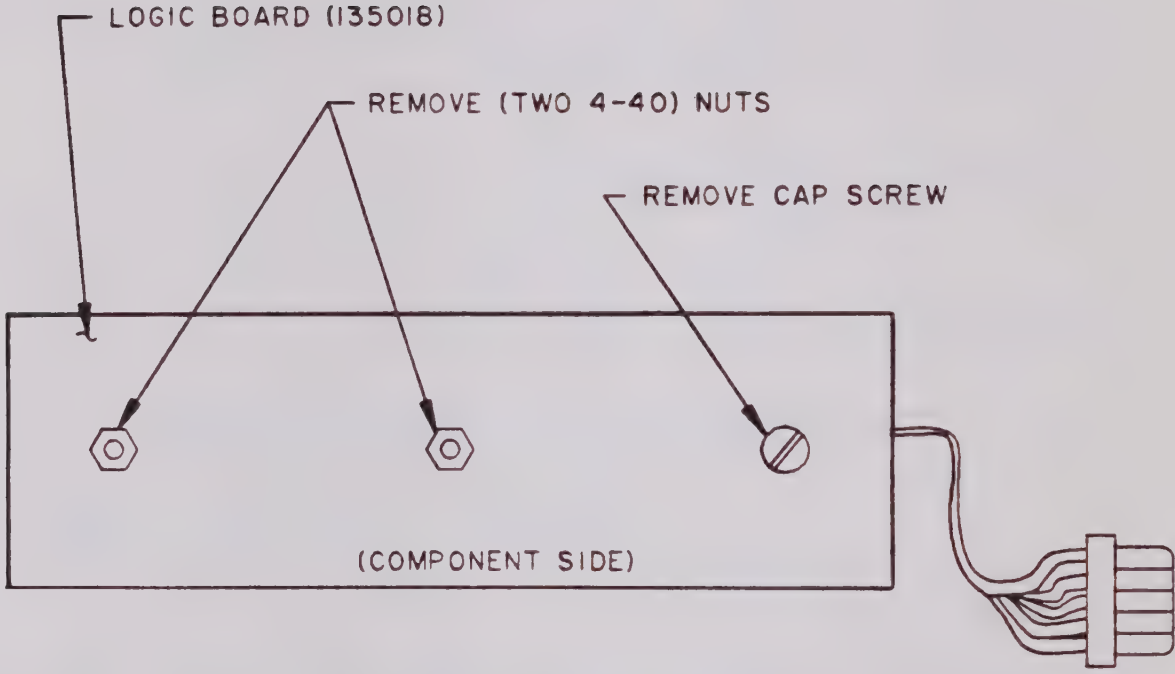

FIGURE 5-4

CONTROL INDICATOR ASSEMBLY
REMOVAL/REPLACEMENT

NOTE

The preceding procedures cover the field replaceable units. Contact Varian MCSD for instructions relating to items not covered in this manual or send unit to factory per instructions in Section 4.4.

HIGH VOLTAGE EQUIPMENT PERSONNEL OPERATING GUIDELINES

1.0 INTRODUCTION

This guideline document presents operating practices for operators and technicians who work with high voltage equipment. In the context of this discussion any voltage that is lethal is viewed as "high voltage". Therefore, even prime power (115 to 440 VAC) is dangerous because prime power potentials have been known to cause death or injury. (See Section 2.0)

THERE ARE NO OLD CARELESS HIGH VOLTAGE TECHNICIANS

Electrical circuits operate quickly and do not allow a careless individual a second chance. When dealing with high voltage, the results are very consistent and predictable and hazards associated with high voltage are always present. THE FACT THAT THE CONTROL SWITCH SAYS OFF DOES NOT MEAN YOU ARE SAFE. Many high voltage circuits are like loaded guns. IN GENERAL, YOU CANNOT SEE A HIGH VOLTAGE HAZARD. You can learn to recognize situations that present a threat and how to avoid them.

The guidelines presented in this guide are not academic. They are based on the experience of engineers and technicians who have years of experience with high voltage circuits.

2.0 WHEN IS VOLTAGE "HIGH"?

As stated earlier, any voltage that will kill you should be treated as "high voltage". Voltages associated with prime power generally do not jump the air gap between people and the equipment. Usually exposed circuit elements such as a terminal, bare piece of wire, or some other non-insulated surface must be touched. One of the problems associated with prime power is that some equipment can be "floating" above ground. In this case, if you place one hand on the equipment chassis and the other on on

earth ground you can be jolted, injured or killed. 440 VAC can stimulate an involuntary muscle response that will either literally throw you across a room or seize and hold you across the voltage terminals. 600 or more volts can hold you indefinitely. If the potential is sufficient to drive 200 milliamps through your body you will be held indefinitely. Some people consider the 200 to 600 volt range to be worse than potentials of thousands of volts.

3.0 GENERAL GUIDELINES

In addition to the above, the following practices have proven effective for personnel who deal with high voltage equipment.

a. HANDS OFF. Avoid contact with any potential source of high voltage. Keep your hands out of the equipment when it is operating.

b. AVOID ACCIDENTAL CONTACT. Make sure that some other part of your body does not come in contact with the high voltage circuits. It is easy to forget the hazards when you are concentrating on a frustrating or interesting task. Pens and badges in shirt pockets could cause contact.

c. NEVER WORK ON HIGH VOLTAGE CIRCUITS WHEN YOU ARE ALONE. If anything should happen to you, your only chance may be prompt action by some other person. Be sure someone else is present and knows what to do in an emergency. (eg. how to shut the equipment off, first aid, who to call, etc.)

d. USE ONE HAND WHEN WORKING WITH HIGH VOLTAGE CIRCUITS. Many people recommend that you put one hand in your pocket when you use a probe or other piece of equipment inside a high voltage section.

e. DO NOT FLOAT MEASURING EQUIPMENT ABOVE GROUND. Make all measurement with respect to ground. The odds are that if you float the instrument, you may forget and reach inside the equipment. Although it is harder to get the right test setup, it is well worth the effort.

f. DO NOT ASSUME THAT THE LEVEL OF RISK IS A FUNCTION OF SIZE. Some large high power high voltage equipment looks docile. One reason the equipment is so big is to get the proper separation between high voltage points. On the other hand, just because the equipment is small is no assurance of safety. Dense packaging results in more difficult access and increases the chance that you will accidentally hit the wrong point.

g. ALWAYS DISCHARGE HIGH VOLTAGE CAPACITORS. High voltage capacitors store a lot of energy for long periods of time. High voltage capacitors also exhibit a "memory" in that they can recover after discharge and reach lethal levels. In addition to the "memory" problem, there have been instances where the built-in safety features have failed or been miswired. Each and every time you go to work on a piece of high voltage equipment use a grounding rod with a long handle to discharge every high voltage capacitor.

h. DO NOT DEPEND ON THE AUTOMATIC FEATURES OF THE EQUIPMENT TO SAVE YOU. You never know when someone has left a circuit disabled, or if there has been a wiring error, or if a component has failed.

i. TAKE PERSONAL RESPONSIBILITY TO ASSURE THAT NO ONE CAN TURN ON THE HIGH VOLTAGE CIRCUITS WHEN YOU ARE WORKING ON THE EQUIPMENT. Precautions would include taping down (or installing keepers) on controls/circuit breakers and/or disconnecting the power source to the high voltage circuits, activating interlocks that prevent high voltage turn on etc. Know where the disconnects are and use them. Do not rely on anyone not to turn on the high voltage.

j. SET UP YOUR TEST EQUIPMENT WITH THE POWER OFF. Conduct the power-on operations when you have your hands out of the equipment.

k. DO NOT USE SHORT PROBES FOR HIGH VOLTAGE MEASUREMENTS. A short probe does not allow any margin for error. If your hand slips you could accidentally come into contact with a danger point. A long probe avoids the whole problem.

l. READ THE INSTRUCTION MANUAL. The best insurance is foreknowledge of hazards.

m. CREATE A FAVORABLE ENVIRONMENT FOR SAFE OPERATIONS. This means that if people are crowding about you, stop the operation if it involves high voltage. Pressure can lead to carelessness. In the same way, fatigue is also an enemy. STAY ALERT AT ALL TIMES WHEN WORKING WITH HIGH VOLTAGE.

n. DO NOT BECOME OVER CONFIDENT. Maintain a healthy respect for high voltage.

o. A GOOD OPERATING PRACTICE IS TO CHECK THE POTENTIAL BETWEEN THE EQUIPMENT CHASSIS AND EARTH GROUND BEFORE YOU COMPLETE THE CIRCUIT WITH YOUR BODY. As voltage levels increase, the protection you get from insulation and air gap diminishes. For example, in a piece of equipment that involves beam voltages of about 16 KV, the beam transformers look very safe with massive insulation on the outside of the coils. Physical contact with the beam coil when the system is operating can be fatal. Although the equipment is placarded to warn people of the presence of high voltage, it is virtually impossible to placard every point of danger in a system.

p. IF YOU DO NOT KNOW HOW THE EQUIPMENT WORKS AND WHAT THE HAZARDS ASSOCIATED WITH THE EQUIPMENT ARE IN SPECIFIC TERMS, DO NOT HANDLE THE EQUIPMENT. The greatest protection you can have when dealing with high voltage equipment is specific, detailed knowledge on that particular piece of equipment.

q. AVOID "HAYWIRE" TEST SETUPS. It is easy to get in trouble if the setup you are using has a jumble of wires.

r. MAKE SURE YOUR CONNECTIONS ARE SECURE. Do not allow leads to slip off and move about in an uncontrolled fashion. Even if it is not one of the high voltage leads, a free lead could (and generally does) move exactly to where you do not want it. The only safe connection is a mechanically secure one.

s. WATCH OUT FOR UNTERMINATED HIGH VOLTAGE LEADS. Some connectors depend on circuit loading to avoid arcing between closely spaced terminals. Unloaded high voltage lines or plugs can lead to arcing situations.

t. SHUT OFF THE HIGH VOLTAGE WHEN YOU ARE MAKING LOW VOLTAGE MEASUREMENTS. It does not make any sense to increase danger needlessly. While there may be times when you cannot shut off the high voltage during a low voltage measurement this is generally not the case.

u. REMOVE THE TEST EQUIPMENT WHEN YOU HAVE FINISHED A MEASUREMMENT PROGRAM. There has been many instruments destroyed or damaged because a test program was conducted in a haphazard manner rather than in an orderly progression from start to finish. Experience has shown many instances when a little order would have prevented a tragedy or avoided an expensive mistake.

v. BE EXTREMELY WARY WHEN MAKING FILAMENT VOLTAGE MEASUREMENTS. The cathode of tubes is elevated above (or below) ground and the filament voltages usually cannot be made with reference to ground. Do everything you can to assure that the high voltage cannot be turned on when you are making your measurements. This includes disconnecting the high voltage drive source, shorting out appropriate leads, taping down switches and anything else you can think of to protect yourself.

w. WHEN TROUBLE SHOOTING A UNIT ASSUME THAT THE SWITCHES AND COMPONENTS ARE DEFECTIVE. You may shut off the high voltage switch in some systems, but if the switch is defective you would still have the high voltage on. Returned units are potential booby traps.

x. MAKE SURE THAT YOUR WORK STATION IS STABLE. Flimsy work surfaces or supports for the equipment or the test instruments represent a real threat. Do not use a setup that you know is unstable and/or dangerous.

y. USE THE 30 SECOND RULE. Wait 30 seconds after you have shut off the equipment before you work on a unit. Part of the reason for the 30 second rule is that some of the dielectrics (insulators) used for high voltage circuits can store a charge. While the amount of charge stored is a function of the size of the object the 30 second rule provides an additional margin of safety.

z. MAINTAIN A HEALTHY RESPECT FOR ANY KIND OF LIVE CIRCUITS. COMPLACENCY CAN HURT YOU OR KILL YOU. Your continued wariness is your best insurance against injury or death.

MICROWAVE RADIATION PERSONNEL OPERATING GUIDELINES

1.0 INTRODUCTION

This guideline document presents operating practices appropriate for operators and technicians who work with equipment involving microwave radiation. Keep in mind that levels of microwave radiation that do not induce immediate physical discomfort in most individuals can be sufficiently high to induce longer term effects. Varian MCSD equipment usually is related to amplification of an RF signal from an external source. Even if a source is not connected to the amplifier you are working with, there are situations where the amplifier can go into a self induced mode and generate high levels of RF energy. This condition can exist if the unit is operataed with the high voltage on and without proper termination on the input and output of the amplifier.

> PROTECT YOURSELF AND THOSE AROUND YOU FROM UNWANTED RF EXPOSURE. ALWAYS TERMINATE THE AMPLIFIER INPUT AND OUTPUT WITH A RF DUMMY LOAD (or a short) BEFORE YOU TURN THE HIGH VOLTAGE ON. This will reduce the chances of oscillation due to internal amplifier noise.

2.0 DISCUSSION

Limit exposure to microwave radiation to prevent unwanted biological effects. There are other effects that can lead to problems if you are careless in operating or servicing microwave equiment. The permissable levels are quite low in comparison to the power levels of the amplifiers built by Varian. (eg less than 10 milliwatts vs 20 to 10,000 watts delivered by different units). Local radiation levels can be detected with the proper equipment. The permissable levels are currently being studied by a number of organizations. In the past the US Safety codes estab-

lished a dozage rate number of 10 mw/cm. sq. Currently there is consideration being given to reducing the permissable level to 1 mw/cm. sq. in the United States as has been the case for several European countries.

3.0 GENERAL GUIDELINES

The purpose of these guidelines is to provide practical approaches to control unwanted microwave energy associated with the operation and servicing of Varian equipment. The following approaches are effective in both laboratory or field environments.

a. ALWAYS TERMINATE THE OUTPUT WAVEGUIDE OR CONNECTOR WITH A DUMMY RF LOAD (CAPABLE OF DISSIPATING FULL CW RF POWER) OR AN APPROPRIATE SHORT. SIMILARLY, TERMINATE THE INPUT TO AVOID THE POSSIBILITY OF THE AMPLIFIER BEING DRIVEN BY STAY LEAKAGE SIGNALS. Incorporate the terminations prior to applying prime power to the amplifier. This procedure prevents self oscillation and irradiation of the local environment.

b. DO NOT LOOK INTO THE OUTPUT PORT OF A POWERED RF AMPLIFIER. Treat the powered amplifier as though it is a loaded gun. Your eyes are particularly vulnerable parts of your body.

c. SHUT OFF THE UNIT IF YOU ARE TRYING TO LOCATE AN RF LEAK. As noted earlier, the levels of concern are very low. Examine the physical unit with the high voltage off. If you have to survey the RF runs with the power on to find the leaky joint or component, start by testing the system with a radiation meter. If the microwave radiation exceeds 0.5 mw/cm. sq. shut off the high voltage and consult your supervisor. Work quickly (not at a panic pace) to minimize the dose level. The dose you get is directly proportional to the power level and the time you are exposed.

Exposure to microwave radiation can induce both thermal and non-thermal biological effects, especially with the eyes. If you damage the lens of your eye by exposure to microwave radiation, cataracts can result. Consider that small microwave ovens are very effecting in cooking foods. If you follow these guidelines you can minimize exposure of yourself and other people in the area to excessive levels of microwave radiation associated with the operations that you control.

varian

WARRANTY

LIMITED WARRANTY FOR PRODUCTS OF MICROWAVE EQUIPMENT DIVISION VARIAN ASSOCIATES, INC.

1. WARRANTY

a. Equipment, components, and subsystems (i.e. "Products"), exclusive of microwave tubes, manufactured and sold by Varian Microwave Equipment Division (MED) are warranted to be free of defects in material and workmanship for a period of one (1) year except as otherwise specified on Varian's quotation or agreed to in writing by Varian. Varian's obligation under all MED warranties is limited in accordance with the periods of time and all other conditions stated in all provisions of this warranty.

b. This warranty applies only to defects in material and workmanship in Products manufactured by Varian, including non-Varian parts, except microwave tubes. Varian makes no warranty whatsoever concerning Products or Accessories not of its manufacture.

c. Microwave tubes, which are supplied as an integral part of MED Products, are warranted only in accordance with the Tube Manufacturer's applicable warranty.

d. Power Supplies and passive components which include electromagnets, solenoids, filters, waterloads, circulators, couplers, waveguide windows, diplexers, and other passive devices are warranted for one (1) year of unlimited hours of operation following the date of shipment thereof, unless otherwise specified.

e. Repair, or at Varian's option, replacement of the Varian Products or defective parts therein shall be the sole and exclusive remedy for all valid warranty claims; provided that under certain circumstances Varian may, as an alternative, elect to refund an equitable portion of the purchase price of the Product.

2. WARRANTY PERIOD

The applicable warranty period shall commence on the date of shipment from Varian's Microwave Equipment Division (MED) to the original purchaser and extend for the stated period following the date of shipment. The warranty period for microwave tubes shall commence on the date of shipment from MED and extend for the specified number of hours of operation in accordance with the terms of the applicable express written warranty of the Tube Manufacturer. Upon beginning of the applicable Varian warranty period, all customer's remedies shall be governed by the terms stated or referenced in this warranty. In-warranty repaired or replacement Products or parts are warranted only for the remaining unexpired portion of the original warranty period applicable to the repaired or replaced Products or parts. Repair or replacement of Products or parts under warranty does not extend the original warranty period.

3. WARRANTY COVERAGE LIMITATIONS

a. The following are expressly **not covered** under warranty:

1) Any loss, damage, and/or malfunction relating in any way to shipping, storage, accident, abuse, alteration, misuse, neglect, failure to use Products under normal operating conditions or within respective Varian specified ratings, failure to use Products according to any operating instructions provided by Varian, lack of routine care and maintenance as indicated in any operating or maintenance instructions, or failure to use or take any proper precautions under the circumstances.

2) Products, items, parts, accessories, subassemblies, or components which are expendable in normal use or are of limited life, such as but not limited to bulbs, fuses, lamps, glassware, etc.

3) Microwave tubes, except as provided in the Tube Manufacturer's applicable express written warranty.

b. Varian reserves the right to revise the foregoing list of what is not covered under this warranty.

4. WARRANTY REPLACEMENT AND ADJUSTMENT

The Warranty Replacement and Adjustment provisions stated in the standard Terms and Conditions of Sale, Electron Device Group, Varian Associates, Inc., are incorporated herein by reference. In addition thereto, the following provisions shall apply to replacement of parts under warranty in MED Products.

a. At Varian's sole option, it may furnish warranty replacement parts to the Customer before the defective part is returned to and received by Varian. If Varian furnishes such parts in advance, the Customer understands and agrees that it will return the replaced defective parts to Varian within sixty (60) days after Varian's advance shipment. In the event defective parts are not returned and received by Varian within this sixty (60) day period, the advance replacement parts shall be deemed not furnished under warranty and Customer agrees to pay Varian's invoices for all such advance shipment replacement parts at their then current selling prices.

b. Varian will not make warranty adjustments for failures of Products or parts which occur after the specified warranted hours of operation or after the specified maximum adjustment period. Unless otherwise agreed, failure shall be deemed to have occurred no more than seven (7) working days before the first date on which a notice of failure is received by Varian. Under no circumstances shall any warranty exceed the period stated above unless expressly agreed to in writing by Varian. In the event Customers and/or users of any Varian MED Products subject to this warranty fail to keep accurate records of the number of hours of operation or time period of use, Varian, at its sole discretion, may reject any such claims or determine probable usage for the equipment, component, or subsystem involved.

5. LIABILITY LIMITATIONS

a. THIS WARRANTY IS EXPRESSLY IN LIEU OF AND EXCLUDES ALL OTHER EXPRESS AND IMPLIED WARRANTIES, INCLUDING BUT NOT LIMITED TO WARRANTIES OF MERCHANTABILITY AND OF FITNESS FOR PARTICULAR PURPOSE, USE, OR APPLICATION, AND ALL OTHER OBLIGA-

Pub. No. 7904 Printed in U.S.A. 10/84

MICROWAVE EQUIPMENT DIVISION • 3200 PATRICK HENRY DRIVE • SANTA CLARA, CA 95054

TIONS OR LIABILITIES ON THE PART OF VARIAN, UNLESS SUCH OTHER WARRANTIES, OBLIGATIONS OR LIABILITIES ARE EXPRESSLY AGREED TO IN WRITING BY VARIAN.

b. All obligations of Varian under this warranty shall cease in the event its Products or parts thereof have been subjected to accident, abuse, alteration, misuse or neglect, or which have not been operated and maintained in accordance with proper operating procedures.

c. IN NO EVENT SHALL VARIAN BE LIABLE FOR INCIDENTAL, CONSEQUENTIAL, SPECIAL, OR RESULTING LOSS OR DAMAGE OF ANY KIND HOWSOEVER CAUSED. VARIAN'S LIABILITY FOR DAMAGES SHALL NOT EXCEED THE PAYMENT, IF ANY, RECEIVED BY VARIAN FOR THE UNIT OF PRODUCT OR SERVICE FURNISHED OR TO BE FURNISHED, AS THE CASE MAY BE, WHICH IS THE SUBJECT OF CLAIM OR DISPUTE.

d. No action, regardless of form, arising out of, or in any way connected with, the Products, or services, furnished or to be furnished by Varian, may be brought by the Customer more than one (1) year after the cause of action has accrued. All patent liability of Varian shall be determined solely in accordance with the standard Terms and Conditions of sale, Electron Device Group, Varian Associates, Inc.

e. Statements made by any person, including representatives of Varian, which are inconsistent or in conflict with the terms of this warranty, shall not be binding upon Varian unless reduced to writing and approved by an officer of Varian.

RETURN PROCEDURES

6. WARRANTY CLAIM

All claims under warranty must be made promptly after occurrence of circumstances giving rise to the claim and must be received within the applicable warranty period by Varian or its authorized representative. Varian reserves the right to reject any warranty claim not promptly reported. After expiration of the applicable warranty period, Microwave Tubes, Power Supplies and Components are not subject to adjustment.

Unnecessary expense and loss of time often can be avoided by calling the local Varian Field Office before returning a Product to the factory. Returned Products are frequently found to be within performance specifications required of new Products. The Varian representative may be able to determine the trouble and obtain satisfactory performance from the Product. This may save shipping time and expense and minimize equipment down time.

7. WARRANTY CLAIM FORM

Before any Product is returned for repair and/or adjustment, written authorization from Varian for the return and instructions as to how and where the Product should be shipped must be obtained. The Product type and serial numbers and a full description of the circumstances giving rise to the warranty claim should be included. Such information will help establish the cause of failure and expedite adjustment or repair. For this purpose, a **Warranty Claim Form** is shipped with each Product.

8. IMPORTANT

Any Product returned without a completed claim form will be considered to have met all contractual requirements. Both the Product and the completed claim form must be submitted to Varian Associates, Inc. prior to expiration of the applicable warranty period.

9. TRANSPORTATION AND PACKAGING

Any Product returned to Varian for examination must be sent prepaid via the means of transportation indicated as acceptable by Varian. Varian reserves the right to reject any warranty claim on any item that has been altered or has been shipped by nonacceptable means of transportation. Returned Products should be carefully packaged in the original container, and unless otherwise indicated, shipped to:

VARIAN ASSOCIATES, INC.
Microwave Equipment Division
3200 Patrick Henry Drive
Santa Clara, California 95054

Attn: Customer Support

10. AUTHORIZATION FOR EVALUATION

When any Product is returned for examination and inspection, or for any other reason, Customer and its shipping agency shall be responsible for all damage resulting from improper packing or handling, and for loss in transit, notwithstanding any defect or nonconformity in the Product. By returning a Product, the owner grants Varian Associates, Inc. permission to open and disassemble the Product as required for evaluation. In all cases Varian has sole responsibility for determining the cause and nature of failure, and Varian's determination with regard thereto shall be final.

If it is found that Varian's Product has been returned without cause and is still serviceable, the Customer will be notified and the Product returned at its expense; in addition, a charge for testing and examination may, in Varian's sole discretion, be made on Product so returned.

Varian Microwave Equipment Division Products are manufactured by Varian Associates, Inc./Headquarters: 611 Hansen Way, Palo Alto, California 94303. Address all inquiries regarding MED warranties to the Microwave Equipment Division, 3200 Patrick Henry Drive, Santa Clara, California 95054.

varian

WARRANTY CLAIM FORM
FOR
MICROWAVE AMPLIFIERS, POWER SUPPLIES AND COMPONENTS

PROPER COMPLETION OF THIS FORM IS VITALLY IMPORTANT TO THE PROMPT AND EFFICIENT HANDLING OF PRODUCT WARRANTY CLAIMS.

I. This claim form, properly completed, must accompany any returned Product and be received by Varian Microwave Equipment Division prior to expiration of the adjustment period. Compliance with this requirement assures the user of the most prompt and thorough service possible. A Product returned within the adjustment period, but without the completed Warranty Claim Form, will be treated as out of warranty.

II. Complete the following information regarding the Product being returned:

A. Product Type: Varian Part No. _____ Serial No. _____

Customer Part No. _____

B. Customer Purchase Order No. _____

Date of Purchase Order _____

C. Control Specification Number _____ Dated _____

(Check one) Document of VA ☐ Your Company ☐

D. Contract Warranty (either Varian Warranty code or specification paragraph)

_____

Filament Hours _____ Warranty Adjustment Began _____
(if applicable)

Adjustment Time _____ (Months) Expires _____

III. Claim is made against warranty based on the following:

A. Specification(s) not met by the Product (list by specification and paragraph number):

Pub. No. 4526 10/86 Printed in U.S.A.

PLEASE FILL IN FOR FAILED PRODUCTS (AS APPLICABLE) (Place an "X" in the appropriate box to show what variance from normal was seen at the time of failure).

Product Serial No * / Type No.	Date Installed	Date Failed	Filament Hours	Radiate Hours		Filament Current		Beam Current		Helix or Body Current		Hi Voltage Arcs		W/G Arcs		Coolant Flow		Mech. Problems		Electro-Magnet Current	
						Lo	Hi	Lo	Hi	Nml	Hi	No	Yes	No	Yes	Nml	Lo	No	Yes	Nml	Lo

Subsystem Serial No. (if applicable)_____

*It is necessary to have the Product serial number rather than the system serial number.

B. Describe the circumstances and/or sequence of events under which the Product failed. Include remarks relating to installation problems, system anomalies, etc.

_____

_____

_____

_____

IV. Purchaser's Name _____

Address _____

_____

Claim made by: _____

Person to contact for additional information:

Name _____

Telephone _____

(Signature) _____

(Date) _____

Return completed form promptly, with Product, to:

Varian Associates, Inc.
Microwave Equipment Division
3200 Patrick Henry Drive
Santa Clara, CA 95054

Telephone: (408) 496-6273
TWX: 910-338-0264

Attention: Returned Products

varian

LIMITED WARRANTY

SUBJECT TO THE TERMS AND CONDITIONS BELOW AND ON THE REVERSE SIDE OF THIS FORM

MICROWAVE TUBES, POWER SUPPLIES AND COMPONENTS

MICROWAVE TUBE DIVISION OF VARIAN ASSOCIATES, INC.

WARRANTY

Microwave Tubes and Devices (Products) sold by Varian are warranted against defects in workmanship and material when used under normal operating conditions within the respective Varian specified ratings and in accordance with Varian operating instructions. The applicable Microwave Device warranty period shall commence on the date of shipment from Varian and extend for a specified number of hours of operation of the filament or heater, or for a specified number of months following the date of shipment thereof, whichever first occurs. The applicable number of hours of operation of the filament or heater included in the warranty for a Microwave Tube Device depends upon the type of device. The most common periods of warranty are listed below:

CODES			
Group	Warranty Code	Warranted Filament or Heater Operation (Hours)	Maximum Adjustment Period (Months)
A	W-U	Unlimited	12
	W-1000	1000	12
	W-2000	2000	12
	W-5000	5000	12
	W-7500	7500	24
	W-10,000	10,000	36
	W-U	Unlimited	36
B	C-1	N/A	12
C	WC-5000	5000	12
	WC-7500	7500	12
		Non-Pro Rata Period (Months)	Pro Rata Period (Months)
D	W-12	4	12
	W-18	6	18
	W-24	6	24
	W-36	6	36

ADJUSTMENTS

Repair, or at Varian's option, replacement of the Product or defective parts therein shall be the sole and exclusive remedy under valid warranty claims; provided that Varian may, as an alternative, elect to refund an equitable portion of the purchase price of the Product in accordance with the following adjustment criteria.

If a Microwave Tube in Group A fails from causes covered by this warranty within the warranted hours of operation and maximum adjustment period, a pro rata adjustment, based on the selling price, will be made as follows:

$$\text{Adjustment} = (\text{Applicable Selling Price}) \times \frac{(\text{Warranted Hours} - \text{Hours of Operation at Failure})}{\text{Warranted Hours}}$$

Passive Components in Group B, including electromagnets, solenoids, filters, waterloads, circulators, couplers, waveguide windows, diplexers, and other passive devices are warranted for unlimited hours of operation during the one year period following data of shipment thereof unless otherwise specified.

If a Reflex Klystron/BWO Microwave Tube in Group C fails from causes covered by this warranty within the warranted hours of operation and maximum adjustment period, a pro rata adjustment, based on selling price, will be made at Varian's discretion, on one of the two (2) following bases:

(1) $$\text{Adjustment} = (\text{Applicable Selling Price}) \times \frac{\text{Warranted Period} - \text{Months from Date of Shipment}}{\text{Warranted Period}}$$

(2) $$\text{Adjustment} = (\text{Applicable Selling Price}) \times \frac{\text{Warranted Hours} - \text{Hours of Operation at Failure}}{\text{Warranted Hours}}$$

If a unit in Group D fails from causes covered by this warranty within the warranted period of operation, an adjustment based on selling price will be made as follows:

(1) $$\text{Adjustment} = (\text{Applicable Selling Price}) \times \frac{\text{Warranted Period} - \text{Months from Date of Shipment}}{\text{Warranted Period}}$$

(2) Except the non-pro rata period shall be 100% adjustment.

No adjustment will be made for failure beyond the warranted hours of operation or beyond the maximum adjustment period. In all cases failure shall be deemed to have occurred no more than seven days before the first date on which notice of failure is received by Varian.

Varian shall have no obligations under this warranty unless the applicable warranty period (number of hours of operation of the filament or heater, and/or number of months from date of shipment) is specified on Varian's quotation, or is otherwise agreed to in writing by Varian. In the event Customers and/or users of any Microwave Tube subject to warranty claim fail to keep accurate records of the number of hours of operation of the filament or heater, Varian, in its sole discretion, may reject any such claim or determine probable usage of the Product.

This warranty is expressly in lieu of and excludes all other warranties of any kind, express or implied, including warranties of merchantability and of fitness for intended purpose, use, or application, and all other obligations or liabilities on the part of Varian, unless such other warranties, obligations or liabilities are expressly agreed to in writing by Varian.

LIABILITIES

Varian's aggregate liability of damages shall not exceed the payment, if any, received by Varian for the Unit of Product or service furnished or to be furnished, as the case may be, which is the subject of claim or dispute. In no event shall Varian be liable for incidental, consequential or special damages. Liability to third parties for bodily injury, including death, resulting from Varian's performance shall be determined in accordance with applicable law, and the total liability limitation stated above shall not be construed as a limitation on Varian for damages for any such bodily injury, including death. No action, regardless of form, arising out of, or in any way connected with, Products or services furnished by Varian, may be brought by Customer more than one (1) year after the cause of action has accrued. All patent liability of Varian shall be determined solely in accordance with the standard Terms and Conditions of Sale, Electron Device Group, Varian Associates, Inc.

Pub. No. 4949 10/86 Printed in U.S.A.

VARIAN • MICROWAVE EQUIPMENT DIVISION • 3200 PATRICK HENRY DR. • SANTA CLARA, CALIFORNIA • 95054

WARRANTY RETURN PROCEDURES AND ADDITIONAL CONDITIONS OF COVERAGE

WARRANTY CLAIM

All claims under warranty must be made promptly after occurrence of circumstances giving rise to the claim and must be received within the applicable warranty period by Varian or its authorized representative. Varian reserves the right to reject any warranty claim not promptly reported. After expiration of the applicable warranty period, Microwave Tubes, Power Supplies and Components are not subject to adjustment.

Unnecessary expense and loss of time often can be avoided by calling the local Varian Field Office before returning a Product to the factory. Returned Products are frequently found to be within performance specifications required of new Products. The Varian representative may be able to determine the trouble and obtain satisfactory performance from the Product. This may save shipping time and expense and minimize equipment down time.

WARRANTY CLAIM FORM

Before any Product is returned for repair and/or adjustment, written authorization from Varian for the return and instructions as to how and where the Product should be shipped must be obtained. The Product type and serial numbers and a full description of the circumstances giving rise to the warranty claim should be included. Such information will help establish the cause of failure and expedite adjustment or repair. For this purpose, a **Warranty Claim Form** is shipped with each Product.

IMPORTANT

Any Product returned without a completed claim form will be considered to have met all contractual requirements. Both the Product and the completed claim form must be submitted to Varian Associates, Inc. prior to expiration of the applicable warranty period.

LIQUID COOLED PRODUCTS

All obligations of Varian under this warranty shall cease and no adjustment, credit or refund shall be made with respect to any liquid cooled Products in which any water coolant has been allowed to remain after removal of the Product from operation. Water coolant remaining in the cooling passages may freeze while the Product is in storage or transit and may damage the Product beyond repair. All water coolant must be blown out of the Product cooling passages by the Customer immediately after removal from operation.

TRANSPORTATION AND PACKAGING

Any Product returned to Varian for examination must be sent prepaid via the means of transportation indicated as acceptable by Varian. Varian reserves the right to reject any warranty claim on any item that has been altered or has been shipped by nonacceptable means of transportation. Returned Products should be carefully packed in the original container, and unless otherwise indicated, shipped to:

VARIAN ASSOCIATES, INC.
Microwave Equipment Division
3200 Patrick Henry Drive
Santa Clara, California 95054

Attn: Customer Support

AUTHORIZATION FOR EVALUATION

When any Product is returned for examination and inspection, or for any other reason, Customer and its shipping agency shall be responsible for all damage resulting from improper packing or handling, and for loss in transit, notwithstanding any defect or nonconformity in the Product. By returning a Product, the owner grants Varian Associates, Inc. permission to open and disassemble the Product as required for evaluation. In all cases Varian has sole responsibility for determining the cause and nature of failure, and Varian's determination with regard thereto shall be final.

If it is found that Varian's Product has been returned without cause and is still serviceable, the Customer will be notified and the Product returned at its expense; in addition, a charge for testing and examination may, in Varian's sole discretion, be made on Products so returned.

varian

WARRANTY CLAIM FORM
FOR
MICROWAVE AMPLIFIERS, POWER SUPPLIES AND COMPONENTS

PROPER COMPLETION OF THIS FORM IS VITALLY IMPORTANT TO THE PROMPT AND EFFICIENT HANDLING OF PRODUCT WARRANTY CLAIMS.

I. This claim form, properly completed, must accompany any returned Product and be received by Varian Microwave Equipment Division prior to expiration of the adjustment period. Compliance with this requirement assures the user of the most prompt and thorough service possible. A Product returned within the adjustment period, but without the completed Warranty Claim Form, will be treated as out of warranty.

II. Complete the following information regarding the Product being returned:

A. Product Type: Varian Part No. _____ Serial No. _____

Customer Part No. _____

B. Customer Purchase Order No. _____

Date of Purchase Order _____

C. Control Specification Number _____ Dated _____

(Check one) Document of VA ☐ Your Company ☐

D. Contract Warranty (either Varian Warranty code or specification paragraph)

_____

Filament Hours _____ Warranty Adjustment Began _____
(if applicable)

Adjustment Time _____ (Months) Expires _____

III. Claim is made against warranty based on the following:

A. Specification(s) not met by the Product (list by specification and paragraph number):

Pub. No. 4526 10/86 Printed in U.S.A.

PLEASE FILL IN FOR FAILED PRODUCTS (AS APPLICABLE) (Place an "X" in the appropriate box to show what variance from normal was seen at the time of failure).

Product Serial No * / Type No.	Date Installed	Date Failed	Filament Hours	Radiate Hours		Filament Current		Beam Current		Helix or Body Current		Hi Voltage Arcs		W/G Arcs		Coolant Flow		Mech. Problems		Electro-Magnet Current	
						Lo	Hi	Lo	Hi	Nml	Hi	No	Yes	No	Yes	Nml	Lo	No	Yes	Nml	Lo

Subsystem Serial No. (if applicable)_____

*It is necessary to have the Product serial number rather than the system serial number.

B. Describe the circumstances and/or sequence of events under which the Product failed. Include remarks relating to installation problems, system anomalies, etc.

_____

_____

_____

_____

IV. Purchaser's Name _____

Address _____

_____

Claim made by: _____

Person to contact for additional information:

Name _____

Telephone _____

(Signature) _____

(Date) _____

Return completed form promptly, with Product, to:

Varian Associates, Inc.
Microwave Equipment Division
3200 Patrick Henry Drive
Santa Clara, CA 95054

Telephone: (408) 496-6273
TWX: 910-338-0264

Attention: Returned Products

SECTION 6

DRAWINGS AND SCHEMATICS

6.1 GENERAL

This section includes the assembly drawings and schematics for the "K-Series" amplifiers. This section is organized in two parts; Part A - drawings that are specific to the basic model numbers defined in Table 1-1; and Part B - drawings that are common to the entire "K-Series". Please note that all the drawings have been placed in numerical order at the end of this section.

Material (Parts) Lists are included with the drawings. The Lists of Material are denoted by the prefix LM before the part number, e.g., LM135216 is the List of Material for drawing 135216.

6.2 DRAWINGS SPECIFIC TO INDIVIDUAL MODEL NO.

6950K1 Series	01000376
6970K1 Series	01000377
6980K2 Series	01000378
6941K1 Series	01000379
6951K1 Series	01000380
6951K2 Series	01000381
6961K1 Series	01000382
6961K2 Series	01000383
6961K3 Series	01000608
6981K1 Series	01000384
6991K1 Series	01000385
6991K3 Series	01000386
6990K1 Series	01000592
6998K1 Series	01000525
6998K2 Series	01005817

6.3 DRAWINGS COMMON TO THE "K-SERIES"

	Power Supply Assembly	E135216-00
	Outline Drawing TWTA	D135223
	Power Supply Schematic	E135228
A1	High Voltage Module Assembly	E135190-00
	High Voltage Module Schematic	D134993
A2	Power Processor PCB Assembly	E135215-00
	Power Processor PCB Schematic	E135212
A3	Fault Logic Timer Assembly	D135018-00
	Fault Logic Timer Schematic	E135015
A5	Grid Supply/Regulator Assembly	D135195
	Grid Supply/Regulator Schematic	D135192
A6	Anode Supply Assembly	D135199
	Anode Supply Schematic	C135196

NOTE: THE DRAWINGS AND SCHEMATICS LISTED ABOVE FOLLOW (ARRANGED IN NUMERICAL ORDER).

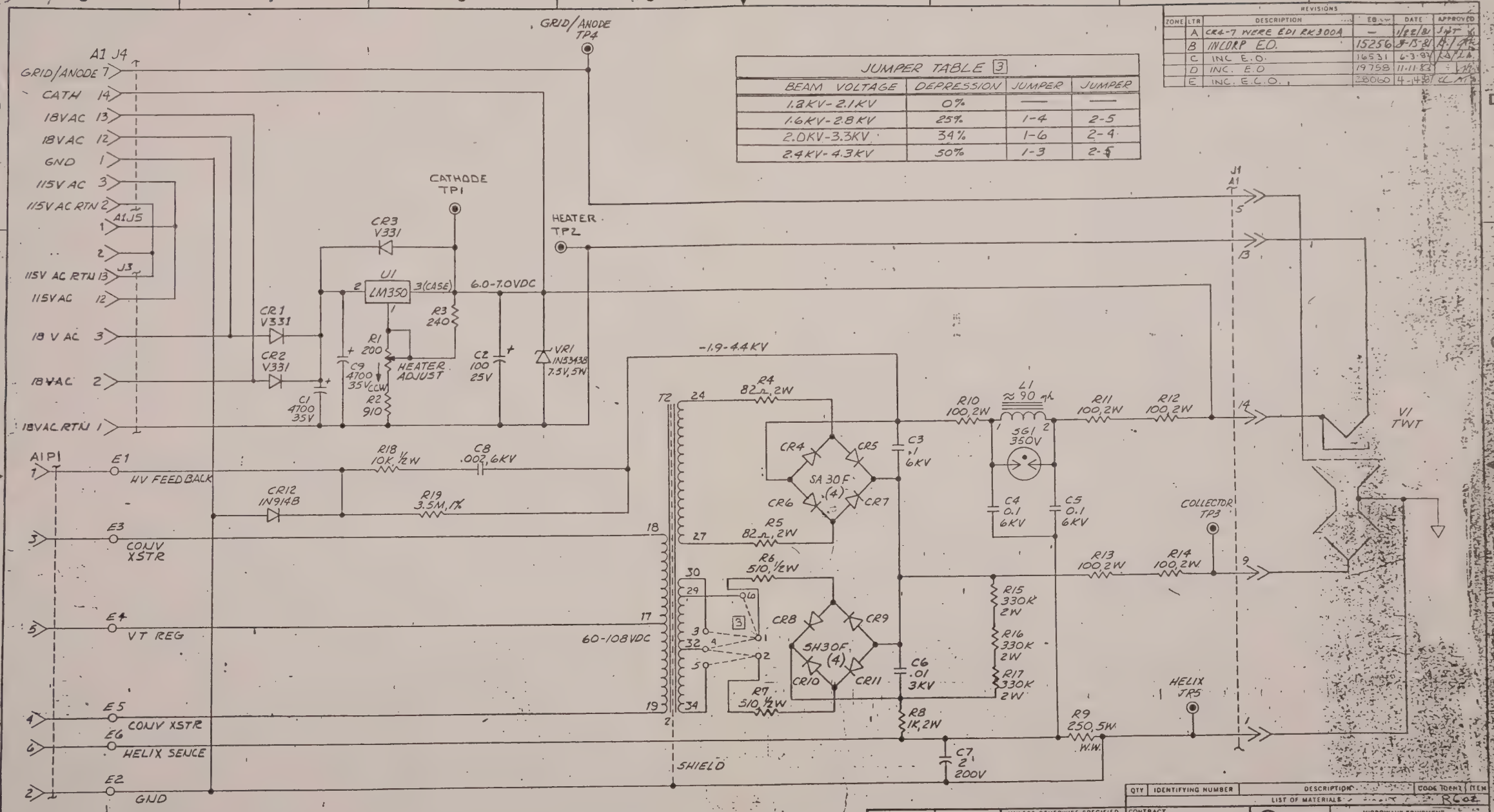

JUMPER TABLE 3			
BEAM VOLTAGE	DEPRESSION	JUMPER	JUMPER
1.2KV-2.1KV	0%	—	—
1.6KV-2.8KV	25%	1-4	2-5
2.0KV-3.3KV	34%	1-6	2-4
2.4KV-4.3KV	50%	1-3	2-5

REVISIONS

ZONE	LTR	DESCRIPTION	EO	DATE	APPROVED
	A	CR4-7 WERE EDI RK300A	—	1/22/81	JWT
	B	INCORP E.O.	15256	8-15-81	
	C	INC E.O.	16531	6-3-82	
	D	INC. E.O	19758	11-11-83	
	E	INC. E.C.O.	28060	4-14-87	

3 SEE JUMPER TABLE.
2. ALL CAPACITOR VALUES ARE IN MICROFARADS.
1. ALL RESISTOR VALUES ARE IN OHMS, 1/4W COMP.
NOTES: UNLESS OTHERWISE SPECIFIED

QTY	IDENTIFYING NUMBER	DESCRIPTION	CODE IDENT	ITEM
		LIST OF MATERIALS	R602	

UNLESS OTHERWISE SPECIFIED DIMENSIONS ARE IN INCHES
DECIMALS: 1PL ± .1 2PL ± .02
3PL ± .005 FRAC ± 1/64
ANG ± 1° SURFACE FINISH
MATERIAL
SPEC NO
FINISH

NEXT ASSEMBLY	USED ON
135190	135216

APPLICATION

CONTRACT NUMBER
DR J.F. Day 6-14-80
CHK 2/9/81
APPD L. Barnes 2/9/81
APPD 4-30-81
DESIGN ACTIVITY APPROVAL
CUSTOMER APPROVAL

varian
MICROWAVE EQUIPMENT DIVISION SANTA CLARA, CALIFORNIA

SCHEMATIC HIGH VOLTAGE PCB

SIZE D CODE IDENT NO 59782 134993
SCALE — SHEET OF
SUPERSEDES

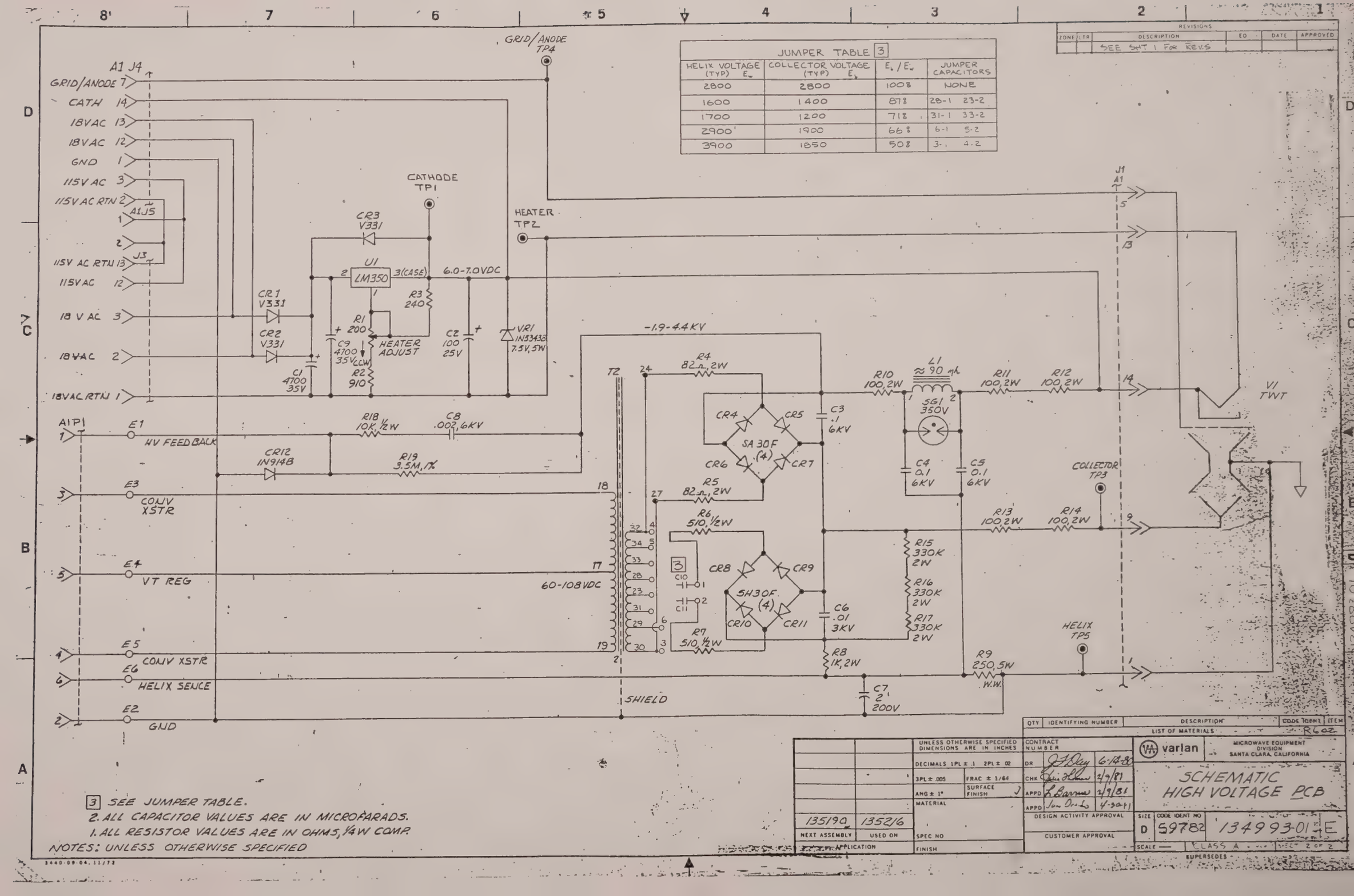

JUMPER TABLE 3			
HELIX VOLTAGE (TYP) E_w	COLLECTOR VOLTAGE (TYP) E_b	E_b/E_w	JUMPER CAPACITORS
2800	2800	100%	NONE
1600	1400	87%	28-1 23-2
1700	1200	71%	31-1 33-2
2900	1900	66%	6-1 5-2
3900	1850	50%	3-1 4-2

3 SEE JUMPER TABLE.
2. ALL CAPACITOR VALUES ARE IN MICROFARADS.
1. ALL RESISTOR VALUES ARE IN OHMS, 1/4W COMP.
NOTES: UNLESS OTHERWISE SPECIFIED

REVISIONS: SEE SHT 1 FOR REVS

QTY	IDENTIFYING NUMBER	DESCRIPTION	CODE IDENT	ITEM
		LIST OF MATERIALS	R602	

UNLESS OTHERWISE SPECIFIED DIMENSIONS ARE IN INCHES
DECIMALS 1PL ± .1 2PL ± .02
3PL ± .005 FRAC ± 1/64
ANG ± 1° SURFACE FINISH
MATERIAL
SPEC NO
FINISH

NEXT ASSEMBLY	USED ON
135190	135216

APPLICATION

CONTRACT NUMBER
DR J F Day 6-14-80
CHK 2/9/81
APPD L Barnes 2/9/81
APPD 4-30-81
DESIGN ACTIVITY APPROVAL
CUSTOMER APPROVAL

varian — MICROWAVE EQUIPMENT DIVISION, SANTA CLARA, CALIFORNIA

SCHEMATIC HIGH VOLTAGE PCB

SIZE D | CODE IDENT NO 59782 | 134993-01 E
SCALE — | CLASS A | SHEET 2 OF 2
SUPERSEDES

3440-09-04, 11/72

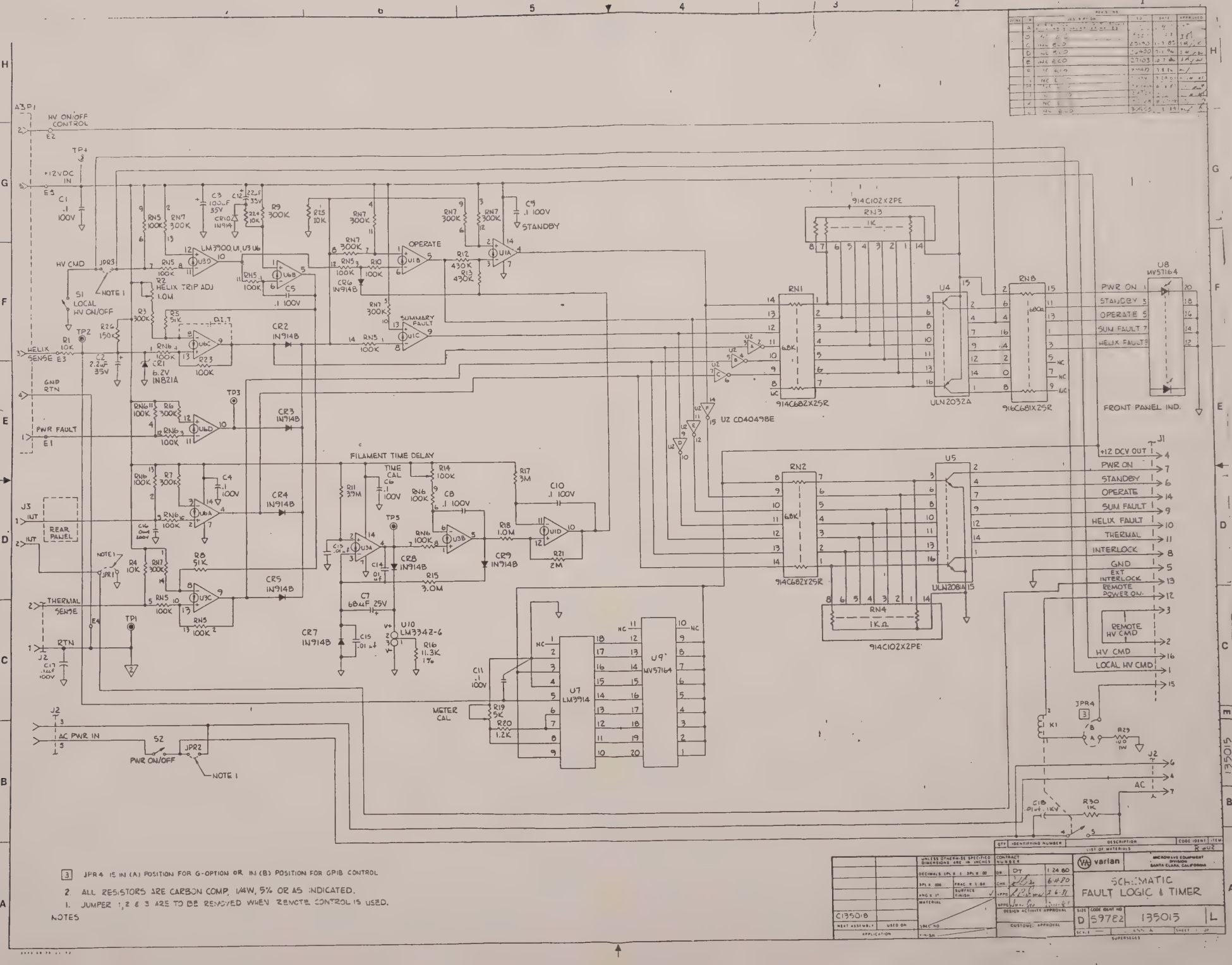

3 JPR4 IS IN (A) POSITION FOR G-OPTION OR IN (B) POSITION FOR GPIB CONTROL

2. ALL RESISTORS ARE CARBON COMP, 1/4W, 5% OR AS INDICATED.

1. JUMPER 1, 2 & 3 ARE TO BE REMOVED WHEN REMOTE CONTROL IS USED.

NOTES

QTY	IDENTIFYING NUMBER	DESCRIPTION	CODE IDENT	ITEM
		LIST OF MATERIALS		

UNLESS OTHERWISE SPECIFIED DIMENSIONS ARE IN INCHES

CONTRACT NUMBER

DR DT 1 24 80

CHK 6-4-80

APPD 2-6-81

DESIGN ACTIVITY APPROVAL

CUSTOMER APPROVAL

C135018

NEXT ASSEMBLY | USED ON

APPLICATION

varian

MICROWAVE EQUIPMENT DIVISION SANTA CLARA, CALIFORNIA

SCHEMATIC FAULT LOGIC & TIMER

SIZE D | CODE IDENT NO 59782 | 135015 | L

SCALE | SHEET 1 OF

SUPERSEDES

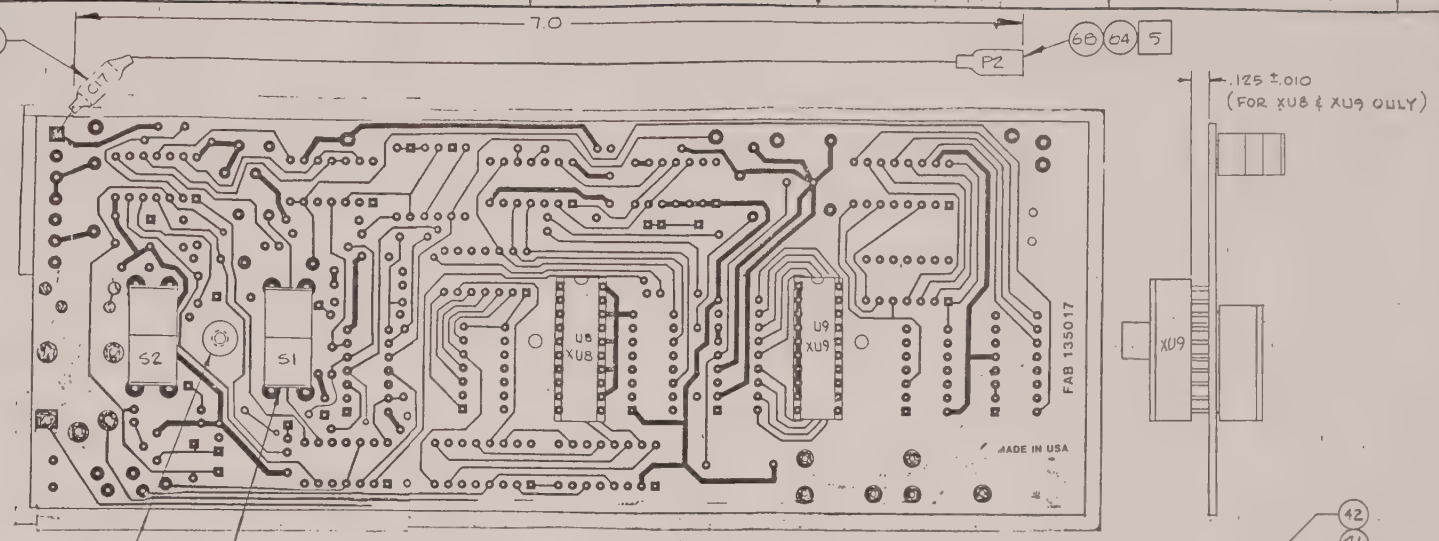

CIRCUIT SIDE

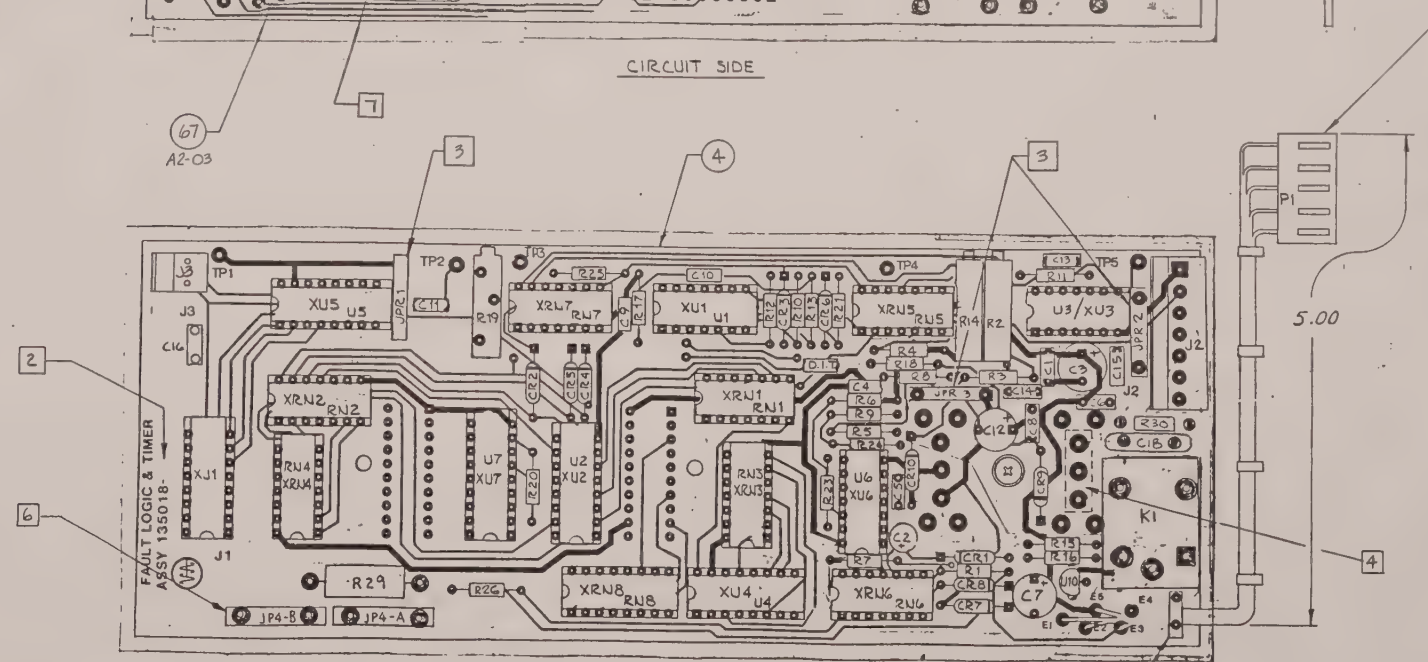

COMPONENT SIDE

WIRE NO.	DESTINATION PART FROM	TO	NUMBER	DESCRIPTION TYPE	AWG	COLOR	LGTH
1	P1-1	A3-E1	81-288 711	E E	24	BRN	A/R
2	P1-2	A3-E2	722	E E	24	RED	A/R
3	P1-3	A3-E3	733	E E	24	ORG	A/R
4	P1-4	A3-E4	744	E E	24	YEL	A/R
5	P1-5	A3-E5	81-288 755	E E	24	GRN	A/R

REVISIONS					
ZONE	LTR	DESCRIPTION	EO	DATE	APPROVED
	A	REVISED	—	[illegible]	[illegible]
	B	INCORP E.O. 15240	1526	2-11-81	[illegible]
	C	INC EO	[illegible]	[illegible]	[illegible]
	D	INC EO	[illegible]	[illegible]	[illegible]
	E	INC EO	[illegible]	[illegible]	[illegible]
	F	INC. E.O.	[illegible]	[illegible]	[illegible]
	G	INC EO	[illegible]	7-1-85	[illegible]
	H	INC ECO	25190	1-8-86	[illegible]
	J	INC ECO	26400	7-1-86	[illegible]
	K	INC ECO	27103	3-7-86	[illegible]
	L	INC ECO	27565	0-8-86	[illegible]
	M	INC ECO	[illegible]	[illegible]	[illegible]
	N	INC ECO	[illegible]	[illegible]	[illegible]
	P	INC ECO	28699	0-14-87	[illegible]
	R	INC ECO	29325	3-3-88	[illegible]
	T	INC ECO	30128	8-29-88	[illegible]
	U	INC ECO	30455	11-6-88	[illegible]
	V	INC ECO	30558	1-4-88	[illegible]

7. S1 IS DELETED FOR -01 VERSION.

6. -00: JPR4 IS IN (A) POSITION FOR G-OPTION OR IN (B) POSITION FOR GPIB CONTROL.
-01: INSTALL JPR4 IN (B) POSITION.

5. SEE POWER SUPPLY ASSY DWG 135216 FOR LOCATION OF P2.

4. APPLY AN EVEN COAT OF RTV 3145 IN POTTED AREA, COMPONENT SIDE, AFTER S2 IS SOLDERED IN.

3. JUMPERS 1, 2 & 3 ARE TO BE REMOVED WHEN REMOTE OPTION IS USED.

2. MARK WITH CURRENT DASH NO. & REVISION LETTER OF ASSEMBLY.

1. ASSEMBLE PER VARIAN WORKMANSHIP STD 87-800-299.

NOTES:

SEE SEPARATE LIST OF MATERIALS-LM 135018

QTY	IDENTIFYING NUMBER	DESCRIPTION	CODE IDENT	ITEM
		LIST OF MATERIALS	R602	

E135216		
NEXT ASSEMBLY	USED ON	
APPLICATION		

UNLESS OTHERWISE SPECIFIED DIMENSIONS ARE IN INCHES
DECIMALS: 1PL ± 1 2PL ± .02
3PL ± .005 FRAC ± 1/64
ANG ± 1° SURFACE FINISH ✓
MATERIAL
SPEC NO
FINISH

CONTRACT NUMBER
DR [signature] 1-12-81
CHK [signature] 2-6-81
APPD [signature] 2-6-81
APPD [signature] 11-20-81
DESIGN ACTIVITY APPROVAL
CUSTOMER APPROVAL

varian — MICROWAVE EQUIPMENT DIVISION, SANTA CLARA, CALIFORNIA

ASSEMBLY
FAULT LOGIC TIMER

SIZE D | CODE IDENT NO 59732 | 135018 | V

SCALE 2/1 | CLASS: A | SHEET 1 OF 1

SUPERSEDES

135018

varian	MICROWAVE EQUIPMENT OPERATIONS	TITLE: FAULT LOGIC & TIMER ASSY	LM 135018	REV V
CODE IDENT NO 59782	APPROVAL DATE			0447A

APPLICATION			REVISION				
NEXT ASSEMBLY	USED ON	EO	REV	DESCRIPTION	EO	DATE	APPROVED
135216			A	R24 WAS D.I.T. ADDED ITEMS 11&32 ITEM 60 WAS TEXAS INSTRUMENTS	-	1/22/81	LWS/JHT
			B	INCORP. E.O.s 15240,	15260	8/13/81	J
			C	INC. E.O.	15480	11/17/81	JS/JR
			D	INC. E.O.	16642	6/17/82	JS/AE
			E	INC. E.O.	18889	6/30/83	JR/JS
			F	INC. E.O.	20728	4/3/84	JR/JK
			G	INC. E.O.	23767	7/1/85	SN/ML
			H	INC. E.C.O.	25190	1/7/86	SN/JK
			J	INC. E.C.O.	26400	6/30/86	SN/
			K	INC. E.C.O.	27103	10/7/86	SN/HW
			L	INC. E.C.O.	27565	12/8/86	ML/HW
			M	INC. E.C.O.	27974	3/24/87	KC/ML/MT
			N	INC. E.C.O.	28383B	6/16/87	JK/ML/MT
			P	INC. E.C.O.	28699	10/14/87	ML/MT
			R	INC. E.C.O.	29325	3/3/88	JK/ML
			T	INC. E.C.O.	30128	8/29/88	LB/LA/JS
			U	INC. E.C.O.	30455	11/8/88	SN/ML
			V	INC ECO	30558	1-4-89	ML

REVISION STATUS

SHEET																											
LTR																											
SHEET																											
LTR																											
SHEET																											
LTR																											

varian	MICROWAVE EQUIPMENT OPERATIONS	FAULT LOGIC & TIMER ASSY	LM 135018	REV ✓

ITEM NO	REF DES	DESCRIPTION	VARIAN PART NO	MFG	MFG OR MS PART NO	QTY. DASH NO			
						00	01	02	03
1		SCHEMATIC	135015			R	R		
2									
3									
4		FABRICATION	135017			1	1		
5	C18	CAPACITOR, CER., .01uf, 1KV	41-264465			1	1		
6	C1,4-6,	CAPACITOR, CERAMIC .1uf, 100V	41-229952		CK06BX104K	8	8		
	C8-11								
7	C2	CAPACITOR, TANT., 2.2 uf 35V	41-609417			1	1		
8	C3	CAPACITOR, ELECT., 100 uf 35V	41-516722	503D107F035ND		1	1		
9	C7	CAPACITOR, TANT., 68 uf 25V	41-609448	SPRAGUE	196D86X9025TE4	1	1		
10	C12	CAPACITOR, TANT., 22 uf 35V	41-609451	SPRAGUE	196D226X9035PE4	1	1		
11	C13-15	CAPACITOR, CER., .01 uf 100V	41-229963		CK05BX103K	3	3		
12	C16	CAPACITOR, CER., .01 uf 200V	41-229951		CK06BX103K	1	1		
13	CR1	DIODE, ZENER 6.2V	66-310821		1N821A	1	1		
14	CR2-10	DIODE, SIGNAL	66-320914		1N914B	9	9		
15	C17	CAPACITOR, POLYPRO., .1 uf 100V	41-708767	F-DYNE	MPP11-10-150-10	1	1		
16	JPR1-4	JUMPER	51-452939	CAMBION	461-2872-05-03-10	4	-		
17	JPR4	JUMPER	51-452939	CAMBION	461-2872-05-03-10	-	1		
18	R1,4,24,	RESISTOR, COMP., 10K, 1/4W, 5%	32-301510		RC07GF103J	4	4		
	R25								
19	R2	RESISTOR, VARIABLE 1M	36-792314	BOURNS	3006P-1-105	1	1		

varian	MICROWAVE EQUIPMENT OPERATIONS	FAULT LOGIC & TIMER ASSY	LM 135018	REV V

ITEM NO	REF DES	DESCRIPTION	VARIAN PART NO	MFG	MFG OR MS PART NO	QTY. DASH NO			
						00	01	02	03
20	R3,6,7,9	RESISTOR, COMP., 300K, 1/4W, 5%	32-301630		RC07GF304J	4	4		
21	R5,8	RESISTOR, COMP., 51K, 1/4W, 5%	32-301551		RC07GF513J	2	2		
22	R10,23	RESISTOR, COMP., 100K, 1/4W, 5%	32-301610		RC07GF104J	2	2		
23	R11	RESISTOR, COMP., 3.9M, 1/4W, 5%	32-301739		RC07GF395J	1	1		
24	R12,13	RESISTOR, COMP., 430K, 1/4W, 5%	32-301643		RC07GF434J	2	2		
25	R14	RESISTOR, VARIABLE, 100K, 3/4W	36-792213	BOURNS	3006P-1-104	1	1		
26	R15,17	RESISTOR, COMP., 3M, 1/4W, 5%	32-301730		RC07GF305J	2	2		
27	R16	RESISTOR, M.F., 11.3K, 1/8W, 1%	31-225113		5N55	1	1		
28	R18	RESISTOR, COMP., 1M, 1/4W, 5%	32-301710		RC07GF105J	1	1		
29	R19	RESISTOR, VARIABLE, 5K, 3/4W, 10%	36-792218	BOURNS	3006P-1-502	1	1		
30	R20	RESISTOR, COMP., 1.2K, 1/4W, 5%	32-301412		RC07GF122J	1	1		
31	R21	RESISTOR, COMP., 2M, 1/4W, 5%	32-301720		RC07GF205J	1	1		
32	R26	RESISTOR, COMP, 150K, 1/4W, 5%	32-301615		RC07GF154J	1	1		
33	R29	RESISTOR, COMP, 100, 1/4W, 5%	33-301310-00		RC32GF101J	1	1		
34	R30	RESISTOR, COMP, 1K, 1/4W, 5%	32-301410-00		RC07GF102J	1	1		
35	RN1,2	RESISTOR NETWORK, 6.8K	31-400017	SPRAGUE	914C682X2SR	2	2		
36	RN3,4	RESISTOR NETWORK, 1K	31-400068	SPRAGUE	914C102X2PE	2	2		
37	RN5,6	RESISTOR NETWORK, 100K	31-400023	ALLEN-BRADLEY	314B104	2	2		
38	RN7	RESISTOR NETWORK, 330K	31-400066	ALLEN-BRADLEY	314B334	1	1		
39	RN8	RESISTOR NETWORK, 680 OHM	31-400067	SPRAGUE	916C681X2SR	1	1		
40									

varian	MICROWAVE EQUIPMENT OPERATIONS	FAULT LOGIC & TIMER ASSY	LM 135018	REV V

ITEM NO	REF DES	DESCRIPTION	VARIAN PART NO	MFG	MFG OR MS PART NO	QTY DASH NO			
						00	01	02	03
41	P1,1-5	CONN. CONTACT SOCKET	51-407110	MOLEX	08-50-0106	5	5		
42	P1	CONNECTOR	51-407016	MOLEX	09-50-3051	1	1		
43	S1	SWITCH, SPDT	71-260064	C&K	7101J3V6Q	1	-		
44	S2	SWITCH, SPDT	71-260064	C&K	7101J3V6Q	1	1		
45	K1	RELAY	72-919714	MIDLAND ROSS/MTEX	296-11E300	1	1		
46									
47	U1,3,6	I.C. - AMPL.	62-600241	NAT SEMICONDUCTOR	LM3900N	3	3		
48	U2	I.C. - BUFFER/LEVEL CONVERTER, HEX	62-600032	RCA	CD4049UBE	1	1		
		INVERTING							
49	U4	I.C. - TRANSISTOR NETWORK	62-601534	SPRAGUE	ULN2032A	1	1		
50	U5	I.C. - TRANSISTOR NETWORK	62-601535	SPRAGUE	ULN2081A	1	1		
51	U7	I.C. - DOT, BAR DISPLAY DRIVER	62-601536	NAT SEMICONDUCTOR	LM3914N	1	1		
52	U8,9	I.C., BAR GRAPH DISPLAY	67-480195	GENERAL INST.	MV57164F	2	2		
53	U10	I.C., CURRENT SOURCE	62-601593	NAT SEMICONDUCTOR	LM234Z-6	1	1		
54									
55									
56									
57	YRN1,2,3-	SOCKET, I.C. - 14 PIN	54-910403	AMP	640357-3	10	10		
	7,XU1,3,6								
58	XRN8,XU2,	SOCKET, I.C. - 16 PIN	54-910404	AMP	640358-3	4	4		
	4,5								

varian	MICROWAVE EQUIPMENT OPERATIONS	FAULT LOGIC & TIMER ASSY	LM 135018	REV V

SHEET

ITEM NO	REF DES	DESCRIPTION	VARIAN PART NO	MFG	MFG OR MS PART NO	QTY DASH NO 00	01	02	03
59	XU7	SOCKET, I.C. - 18 PIN	54-634059	TEXAS INST.	C84-18-02	1	1		
60	XU8,9	SOCKET, I.C. - 20 PIN	54-910379	CIRCUIT ASSY	CA-20S-101WW	2	2		
61	XJ1	SOCKET, I.C. - 16 PIN	54-634023	CKT ASSY	CA-16S-10SA	1	1		
62	J2	CONNECTOR, 7 PIN	51-411018	MOLEX	09-65-1071	1	1		
63	J3	CONNECTOR, 2 PIN	51-407017	MOLEX	09-65-1021	1	1		
64	P2	CONNECTOR, PUSH ON	15-999026-01	HOLLINGSWORTH	XS09778	1	1		
65									
66		SILICONE SEALANT	88-298993	DOW CORNING	RT 3145	AR	AR		
67		STANDOFF, #4-40 x 5/8 LG.	22-429915	R.A.F. ELECT HDWR	2059-440-B-1	1	1		
68		WIRE, 18 AWG x 6" LG., BLACK	81-288819			1	1		
69		CLAMP, CABLE TIE	22-119650	PANDUIT	SST1M	AR	AR		
70		SHRINK TUBING, 2" LG.	88-488120	PENNTUBE	SMT-1	1	1		
71									
72									
73									
74									
75									
76									
77									
78									
79									

ZONE	LTR	DESCRIPTION	EO	DATE	APPROVED
	B	INCORP E. 15243	15201	[illegible]	[illegible]
	C	INCORP EO	1528	8-4-81	[illegible]
	D	UPDATED REV LTR	15366	9-9-81	[illegible]
	E	INC EO	15411	10-19-81	[illegible]
	F	INC EO	15472	11-19-81	JS/JR
	G	INC. EO	15525	12-6-81	JS/JR
	H	INC EO	15656	2-18-82	[illegible]
	J	INC. EO.	16961	8-5-82	[illegible]
	K	INC EO	[illegible]	[illegible]	[illegible]
	L	INC EO	[illegible]	[illegible]	[illegible]
	M	INC EO 15278	[illegible]	[illegible]	[illegible]
	N	INC. EO	[illegible]	[illegible]	[illegible]
	P	INC EO	[illegible]	[illegible]	[illegible]
	R	INC EO	[illegible]	[illegible]	[illegible]
	T	INC EO	[illegible]	[illegible]	[illegible]
	U	INC EO.	22063	11-14-84	[illegible]
	V	INC. E.O 22916, 22881,	22834	2-20-85	[illegible]
	W	INC. E.C.O.	25103	12-1-85	[illegible]
	Y	INC ECO	25385	2-4-86	[illegible]
	AA	INC ECO	28060	4-15-86	[illegible]
	AB	INC ECO	28780	10-12-87	[illegible]
	AC	INC ECO	28994	11-23-87	[illegible]

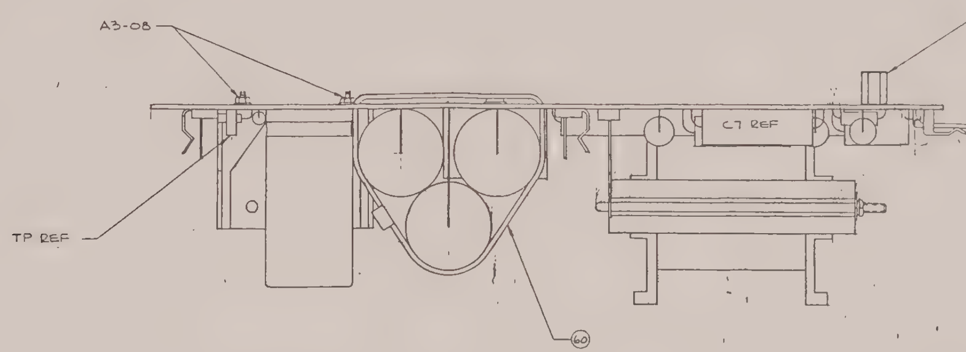

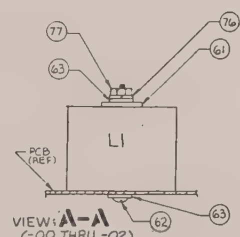

VIEW: A-A
(-00 THRU -02)

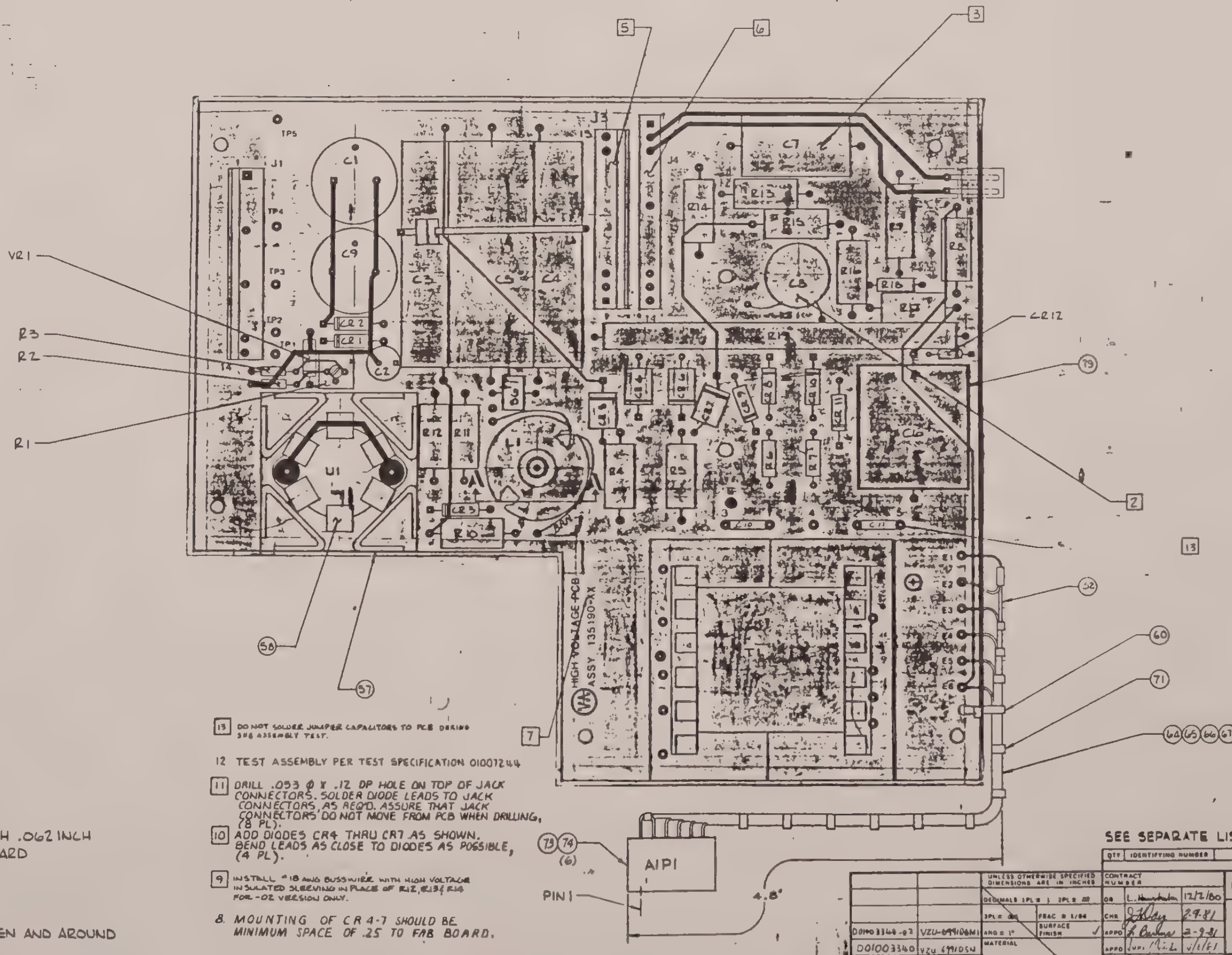

-00

WIRE LIST						
DESTINATION			DESCRIPTION			VARIAN
	FROM	TO	TYPE	AWG	COLOR	PART NO.
1	P1-1	A1-E1	COAXIAL		CENTER CONDUCTOR	01000111-01
2	P1-2	A1-E2	CABLE		SHIELD	
3	P1-3	A1-E3	EE	20	ORN	81-288828
4	P1-4	A1-E5	EE	20	YEL	81-288829
5	P1-5	A1-E4	EE	20	GRN	81-288830
6	P1-6	A1-E6	EE	20	BLU	81-288831

13 DO NOT SOLDER JUMPER CAPACITORS TO PCB DURING SHG ASSEMBLY TEST.

12 TEST ASSEMBLY PER TEST SPECIFICATION 01007244

11 DRILL .053 Ø X .12 DP HOLE ON TOP OF JACK CONNECTORS. SOLDER DIODE LEADS TO JACK CONNECTORS, AS REQ'D. ASSURE THAT JACK CONNECTORS DO NOT MOVE FROM PCB WHEN DRILLING, (8 PL).

10 ADD DIODES CR4 THRU CR7 AS SHOWN. BEND LEADS AS CLOSE TO DIODES AS POSSIBLE, (4 PL).

9 INSTALL #18 AWG BUSSWIRE WITH HIGH VOLTAGE INSULATED SLEEVING IN PLACE OF R12, R13 & R14 FOR -02 VERSION ONLY.

8. MOUNTING OF CR 4-7 SHOULD BE MINIMUM SPACE OF .25 TO FAB BOARD.

7 MARK WITH CORRECT DASH NO & CURRENT REVISION LETTER OF PCB ASSY.

6 REMOVE PINS 4 THRU 6 & 8 THRU 11 FROM J4

5 REMOVE PINS 4 THRU 11 FROM J3

4. RESISTORS R4,5,8 THRU 17 TO BE MOUNTED WITH .062 INCH CLEARANCE BETWEEN COMPONENT AND BOARD

3 MOUNT C7 FLAT AGAINST BOARD

2 MOUNT C8 PARALLEL WITH BOARD

1. APPLY THERMAL COMPOUND ITEM (55) BETWEEN AND AROUND HEATSINKS ITEM (57) (58)

NOTES:

SEE SEPARATE LIST OF MATERIALS-LM135190

QTY	IDENTIFYING NUMBER	DESCRIPTION	CODE IDENT	ITEM
		LIST OF MATERIALS	R602	

NEXT ASSEMBLY	USED ON
D01003340-02	VZU-6991D6M1
D01003340	VZU 6991D5N
F135216	VZU 6991D6M
APPLICATION	

UNLESS OTHERWISE SPECIFIED DIMENSIONS ARE IN INCHES
DECIMALS 1PL ± | 2PL ±
3PL ± | FRAC ± 1/64
ANG ± 1° | SURFACE FINISH ✓
MATERIAL
SPEC NO
FINISH

CONTRACT NUMBER
DR L. [signature] 12/2/80
CHK [signature] 2-9-81
APPD [signature] 2-9-81
APPD [signature] 1/1/81
DESIGN ACTIVITY APPROVAL
CUSTOMER APPROVAL

varian — MICROWAVE EQUIPMENT DIVISION, SANTA CLARA, CALIFORNIA

HIGH VOLTAGE PCB ASSEMBLY

SIZE E | CODE IDENT NO 59782 | 135190 | AC
SCALE 2/1 | CLASS A | SHEET 1 OF 3
SUPERSEDES

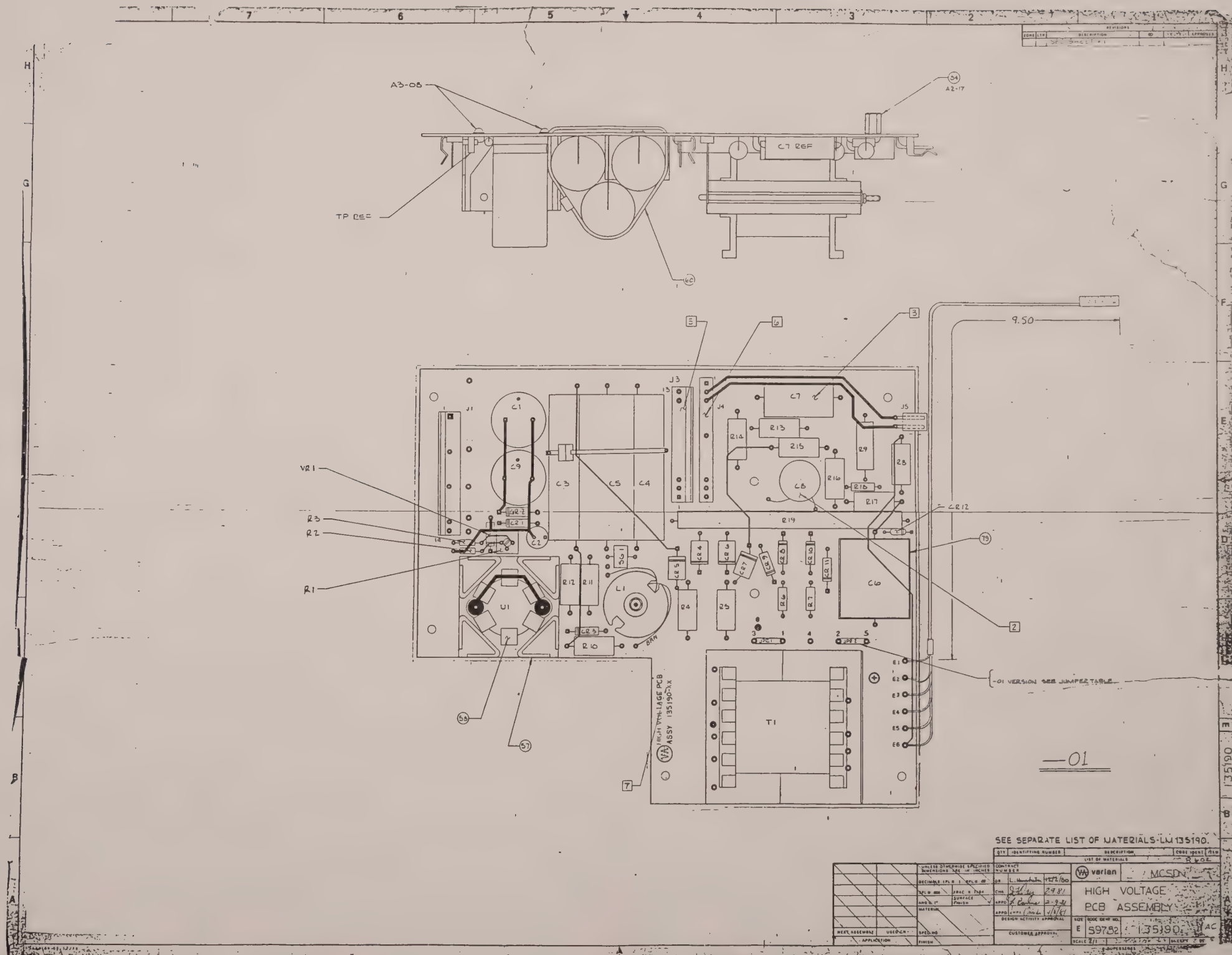

A3-08
A2-17
C7 REF
TP REF
9.50
VR1
R3
R2
R1
CR12
-01 VERSION SEE JUMPER TABLE
HIGH VOLTAGE PCB ASSY 135190-XX
-01
SEE SEPARATE LIST OF MATERIALS-LM 135190.
varian
MCSDN
HIGH VOLTAGE PCB ASSEMBLY
E
S97.52
135190
SCALE 2/1

ZONE	LTR	DESCRIPTION	ID	DATE	APPROVED
		SEE SHEET #1			

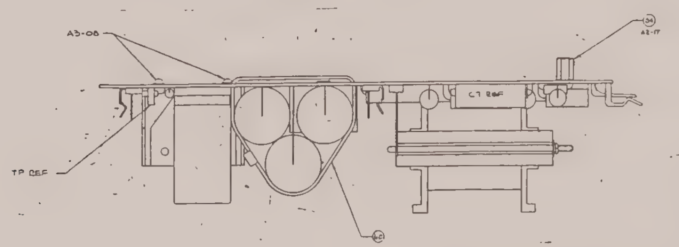

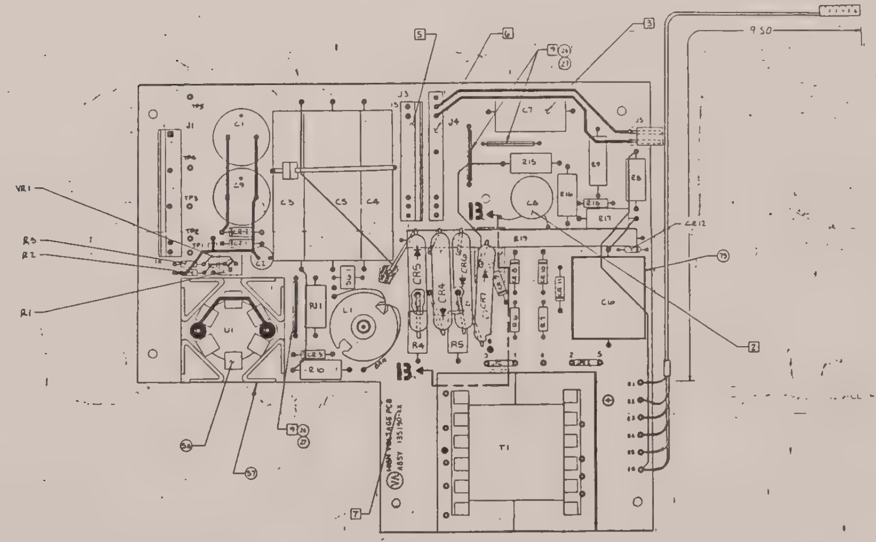

-02 AS SHOWN

(FOR NOTES SEE SHEET #1)

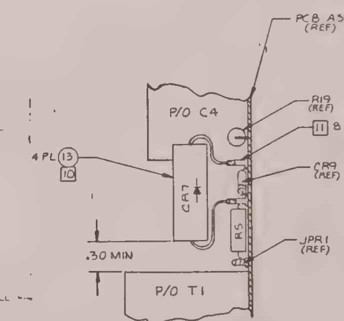

VIEW; 13-13
SCALE · NONE

-02

SEE SEPARATE LIST OF MATERIALS LM135190

QTY	IDENTIFYING NUMBER	DESCRIPTION	CODE IDENT	ITEM
		LIST OF MATERIALS		

UNLESS OTHERWISE SPECIFIED DIMENSIONS ARE IN INCHES	CONTRACT NUMBER
DECIMALS 1PL ± .1 2PL ± .03	DR 1/10/85
3PL ± .005 FRAC ± 1/64	CHK
ANG ± 1° SURFACE FINISH ✓	APPD
MATERIAL	APPD
SPEC NO	DESIGN ACTIVITY APPROVAL
FINISH	CUSTOMER APPROVAL
NEXT ASSEMBLY / USED ON / APPLICATION	

varian — MICROWAVE EQUIPMENT DIVISION, SANTA CLARA, CALIFORNIA

HIGH VOLTAGE PCB ASSEMBLY

SIZE	CODE IDENT NO		
E	59782	135190	AC
SCALE NONE	CLASS A	SHEET 3 OF 3	

SUPERSEDES

135190

varian	MICROWAVE EQUIPMENT OPERATIONS	TITLE: HIGH VOLTAGE PCB ASSY	LM 135190	REV AC
CODE IDENT NO 59782	APPROVAL	DATE		0460A

APPLICATION			REVISION				
NEXT ASSEMBLY	USED ON	EO	REV	DESCRIPTION	EO	DATE	APPROVED
			A	ITEM 13 MFTR & P/N WAS EDI RK 300A	ERO	1/22/81	JHT/LWB
			B	INCORP. E.O. 15261 &	15248	8/13/81	RJV/AR
			C	INCORP. E.O.	15281	9/4/81	RL/JHS

DASH	NEXT ASSY	USED ON
-00	E135216	K RACK
-01	-	-
-02	01003340-01	VZU-6991D5N
	01003340-02	VZU-6991D6M1

D	INC. E.O.	15366	9/19/81	AE/JR
E	INC. E.O.	15411	10/19/81	KK/JR
F	INC. E.O.	15472	11/19/81	JS/JR
G	INC. E.O.	15525	12/21/81	JS/LA
H	INC. E.O.	15656	2/18/82	KB/LA
J	INC. E.O.	16961	8/5/82	FR/LA
K	INC E.O.	18812	2/14/83	JS
L	INC. E.O.	18834	6/24/83	
M	INC. E.O 19278 &	19286	8/26/83	JR/AE
N	INC. E.O.	19758	11/14/83	JR/
P	INC. E.O.	20415	2/29/84	SN
R	INC. E.O.	20745	4/6/84	SN/D.KH
T	INC. E.O.	21503	8/9/84	SN/ML
U	INC. E.O.	22063	11/1/84	D.KH/ML
V	INC. E.O. 22916, 22881 &	22834	2/20/85	JR/ML
W	INC. E.C.O.	25103	12/11/85	LM/ML
Y	INC. E.C.O.	25385	1/30/86	MS/LA
AA	INC. E.C.O.	28060	4/14/87	SN/MT
AB	INC. ECO	28780	10/12/87	KC MT
AC	INC ECO	28994	11-23-87	MC/MT. Wel

REVISION STATUS

SHEET																									
LTR																									
SHEET																									
LTR																									
SHEET																									
LTR																									

varian | MICROWAVE EQUIPMENT OPERATIONS | HIGH VOLTAGE PCB ASSY | LM 135190 | REV AC

ITEM NO	REF DES	DESCRIPTION	VARIAN PART NO.	MFG	MFG OR MS PART NO	QTY/DASH NO -00	-01	-02	-03
1		SCHEMATIC	134993-01			R	-	-	
2		SCHEMATIC, HIGH VOLTAGE PCB	01000524			-	R	-	
3		FABRICATION, PCB	135189			1	1	1	
4		SCHEMATIC, HIGH VOLTAGE PCB	01004420			-	-	R	
5									
6	C1,9	CAPACITOR, ALUM., 4700uf, 35V	41-503907	MEPCO	3479BB472M035IMB5	2	2	2	
7	C2	CAPACITOR, ELECT, 100uf, 25V	41-516722	SPRAGUE	503D107M035NB	1	1	1	
8	C3-5	CAPACITOR, MYLAR, W.F., 0.1UF, 6KV	41-719305	TRW	X675HV104960W2	3	3	3	
9	C6	CAPACITOR, .01uf, 3KV	41-199802	CUSTOM ELECT.	CGR1A-302103K	1	1	1	
10	C7	CAPACITOR, MYLAR, W.F., 2uf, 200V	41-729997	TRW	X663F20592W2	1	1	1	
11	C8	CAPACITOR, CER., .002uf, 6KV	41-299888	CENTRALAB	DD60-202	1	1	1	
12	CR8-11	DIODE	66-393329	EDI	RG300A	-	-	4	
13	CR4-7	DIODE	66-393344	SEMTEC	SCF5000	-	-	4	
14	CR1-3	DIODE	66-396931	VARO INC.	V331	3	3	3	
15	CR4-11	DIODE	66-393332	EDI	RK400A	8	8	-	
16	CR12	DIODE	66-320914		1N914B	1	1	1	
17	J5	CONNECTOR, 2 PIN	51-407106	MOLEX	09-75-1028	1	1	1	
18	J1	CONNECTOR, 14 PIN	51-411010	MOLEX	09-65-1141	1	1	1	
19	C10,11	CAPACITOR, CER., .0068 uf, 4KV (JUMPER)	41-299898	CERA-MITE	564CZ5UAA402EP682Z	2	-	-	
20	J3	CONNECTOR, 13 PIN	51-411-19	MOLEX	09-65-1131	1	1	1	
21	J4	CONNECTOR, 14 PIN	51-411009	MOLEX	09-67-2149	1	1	1	

varian	MICROWAVE EQUIPMENT OPERATIONS	HIGH VOLTAGE PCB ASSY	LM 135190	REV AC

ITEM NO	REF DES	DESCRIPTION	VARIAN PART NO.	MFG	MFG OR MS PART NO	QTY/DASH NO -00	01	-02	03
22	JPR1,2	JUMPER	51-452939	CAMBION	461-2872-05-03-10	-	2	2	
23									
24									
25	L1	FILTER CHOKE	C135224			1	1	1	
26		BUSS WIRE, 18 AWG	81-099818			-	-	AR	
27		SLEEVING, INSULATED	88-495064			-	-	AR	
28	R1	RESISTOR, VARIABLE 200 OHM	36-797912	BECKMAN	72PR200	1	1	1	
29	R2	RESISTOR, COMP., 910 OHM, 1/4W, 5%	32-301391		RC07GF911J	1	1	1	
30	R3	RESISTOR, COMP., 240 OHM, 1/4W, 5%	32-301324		RC07GF241J	1	1	1	
31	R10-14	RESISTOR, COMP., 100 OHM, 2W, 5%	34-401310		RC42GF101J	5	5	-	
32	R6,7	RESISTOR, COMP., 510 OHM, 1/2W, 5%	32-201351		RC20GF511J	2	2	2	
33	R8	RESISTOR, COMP., 1K, 2W, 5%	34-401410		RC42GF102J	1	1	1	
34	R9	RESISTOR, W.W., 250 OHM, 5W, 1%	31-599512	OHMITE	45F251	1	-	1	
35	R15-17	RESISTOR, COMP., 330K, 2W, 5%	34-401633		RC42GF334J	3	3	3	
36	R18	RESISTOR, COMP., 10K, 1/2W, 5%	32-201510		RC20GF103J	1	1	1	
37	R19	RESISTOR, M.F., 3/5M 5-1/4W, 1%	31-600653	PYROFILM	PVC400	1	1	1	
38	R4,5	RESISTOR, COMP., 82 OHM, 2W, 5%	34-401282		RC42GF820J	2	2	-	
39	R9	RESISTOR, W.W., 100 OHM, 3W, 1%	31-599720			-	1	-	
40	R10-11	RESISTOR, COMP., 100 OHM, 2W, 5%	34-401310		RC42GF101J	-	-	2	
41	SG1	SPARK GAP, 350 V	55-500160	SIEMENS	B1-A350	1	1	1	
42	R4,5	RESISTOR, COMP., 27 OHM, 2W, 5%	34-401227		RC42GF270J	-	-	2	

varian	MICROWAVE EQUIPMENT OPERATIONS	HIGH VOLTAGE PCB ASSY	LM 135190	REV AC

ITEM NO	REF DES	DESCRIPTION	VARIAN PART NO	MFG	MFG OR MS PART NO	QTY/DASH NO -00	01	02	-03
43	T1	HIGH VOLTAGE EXFMR	D135184			-	1	-	
44	T1	HIGH VOLTAGE XFMR	01004091			-	-	1	
	T1	HIGH VOLTAGE XFMR	01007913			1	-	-	
45	TP1-5	TEST JACK (RED)	51-451861	E.F. JOHNSON	105-0852-001	5	5	5	
46									
47									
48	U1	REGULATOR, ADJUSTABLE VOLTAGE	620601329	NATIONAL SEMI	LM350K	1	1	1	
49									
50									
51	VR1	DIODE, BREAKDOWN 7.5V, 5W	66-325343		1N5343B	1	1	1	
52		ASSY, CABLE COAX	B-01000111			1	1	1	
53									
54		STANDOFF, #6-32 x 3/8 LG	22-429904	RAF	2106-632-B-1	1	1	1	
55		THERMAL COMPOUND	88-298900	WAKEFIELD	120-8	AR	AR	AR	
56									
57		HEATSINK TO-3	66-901006	AAVID	5690C-3	1	1	1	
58		HEATSINK TO-3	66-901007	AAVID	5791C	1	1	1	
59									
60		TIE WRAP	22-119654	PANDUIT	SST35	1	1	1	
61		WASHER, NYLON	14-999725			1	1	1	
62		SCREW, #6-32 x 1-1/4" LONG	12-222006-22			1	1	1	

varian	MICROWAVE EQUIPMENT OPERATIONS	HIGH VOLTAGE PCB ASSY	LM 135190	REV AC

ITEM NO	REF DES	DESCRIPTION	VARIAN PART NO.	MFG	MFG OR MS PART NO	QTY/DASH NO -00	01	02	-03
63		FLAT WASHER #6	14-122006			2	2	2	
64		WIRE, TEFLON INS, BLUE	81-288766			AR	AR	AR	
65		WIRE, TEFLON INS, GRN	81-288755			AR	AR	AR	
66		WIRE, TEFLON INS, YEL	81-288744			AR	AR	AR	
67		WIRE, TEFLON INS, ORN	81-288733			AR	AR	AR	
68									
69									
70									
71		CABLE TIE	22-119650	PANDUIT	SSTIM	12	12	12	
72									
73	A1P1	CONNECTOR, 7 PIN	51-407148	MOLEX	09-50-7061	1	1	1	
74		CONNECTOR SOCKET PINS	51-407012	MOLEX		6	6	6	
75									
76		LOCK WASHER #6	14-317106			1	1	1	
77		NUT #6-32	13-102006			1	1	1	
78									
79		INSULATION TAPE	88-189624	T.F.E. INDUST.	#603-1	AR	AR	AR	
80									
81									
82									
83									

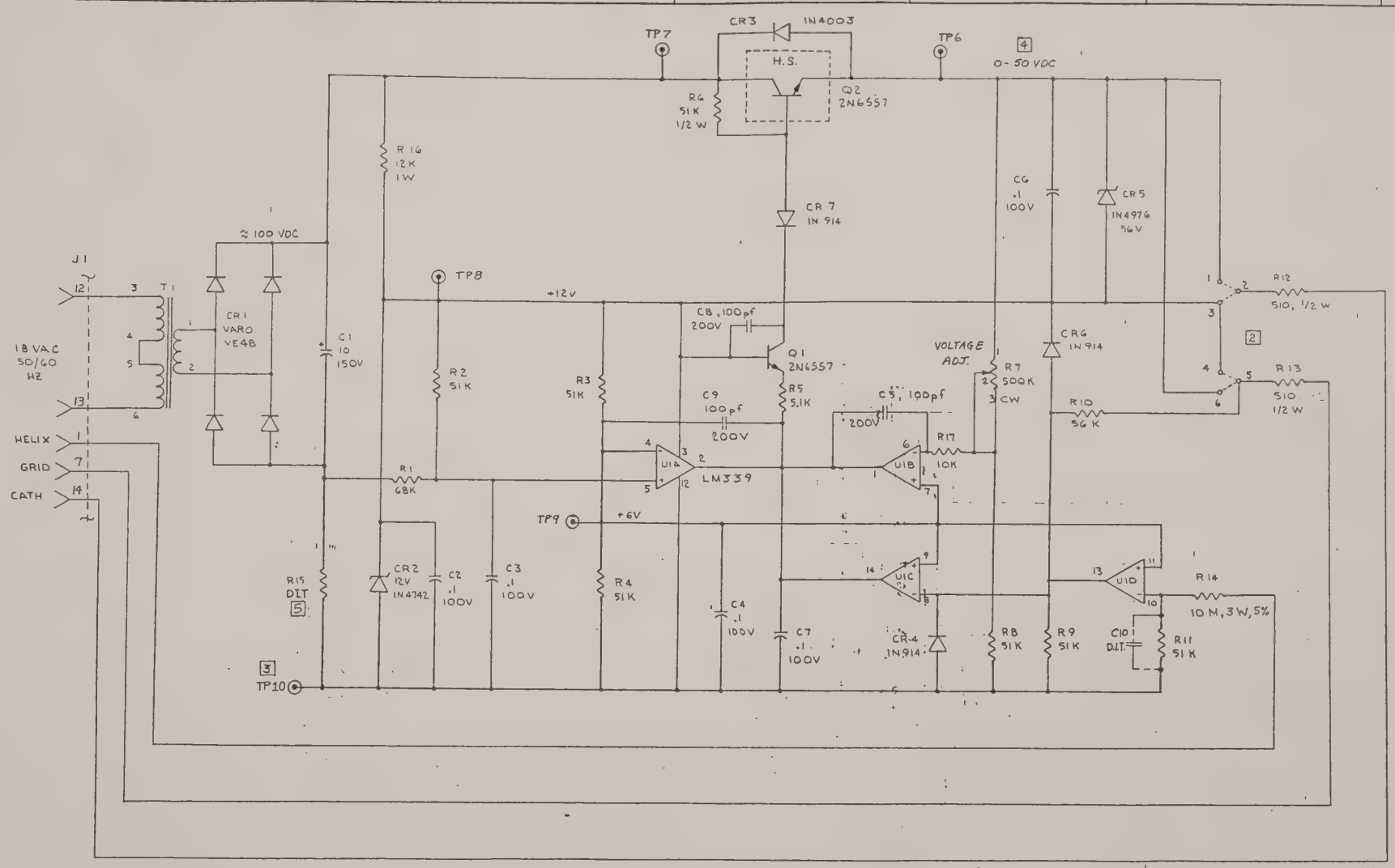

REVISIONS					
ZONE	LTR	DESCRIPTION	EO	DATE	APPROVED
	A	ADDED C10-D.I.T.	—	2-6-81	
	B	INC. E.O.	23027	3-29-83	

DASH NO.	JUMPER TABLE [2]		
00	POS GRID	3-2	5-6
01	NEG GRID	1-2	4-5

[5] 100Ω OR 51Ω.

[4] TP6 VOLTAGE REF TO TB8

[3] ALL VOLTAGES REF TO TP10 EXCEPT TP6.

[2] SEE JUMPER TABLE

NOTES:

1. UNLESS OTHERWISE NOTED: ALL RESISTORS 1/4W, COMP., 5%
   ALL CAPACITOR ARE IN MICROFARDS

QTY	IDENTIFYING NUMBER	DESCRIPTION	CODE IDENT	ITEM
		LIST OF MATERIALS		R602

UNLESS OTHERWISE SPECIFIED DIMENSIONS ARE IN INCHES	CONTRACT NUMBER	varian	MICROWAVE EQUIPMENT DIVISION SANTA CLARA, CALIFORNIA
DECIMALS: 1PL ± 1 2PL ± 02	DR 6/21/80		
3PL ± 005 FRAC ± 1.64	CHK 2-6-81	SCHEMATIC	
ANG ± 1° SURFACE FINISH ✓	APPD 2-6-81	GRID SUPPLY / REGULATOR	
MATERIAL	APPD 4-6-81		
D135195 K-RACKS	DESIGN ACTIVITY APPROVAL	SIZE D	CODE IDENT NO 59782 — 135192 — B
NEXT ASSEMBLY USED ON	CUSTOMER APPROVAL	SCALE N/A	CLASS A — SHEET 1 OF 1
APPLICATION SPEC NO FINISH		SUPERSEDES	

135192

REVISIONS					
ZONE	LTR	DESCRIPTION	EO	DATE	APPROVED
	A	REVISED	—	1/30/81	JNT
	B	INCORP E.O.	15243	8-13-81	
	C	INC E.O.	15287	9-4-81	

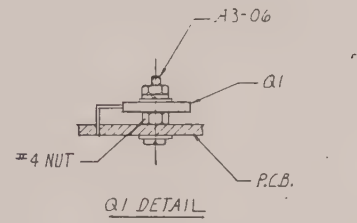

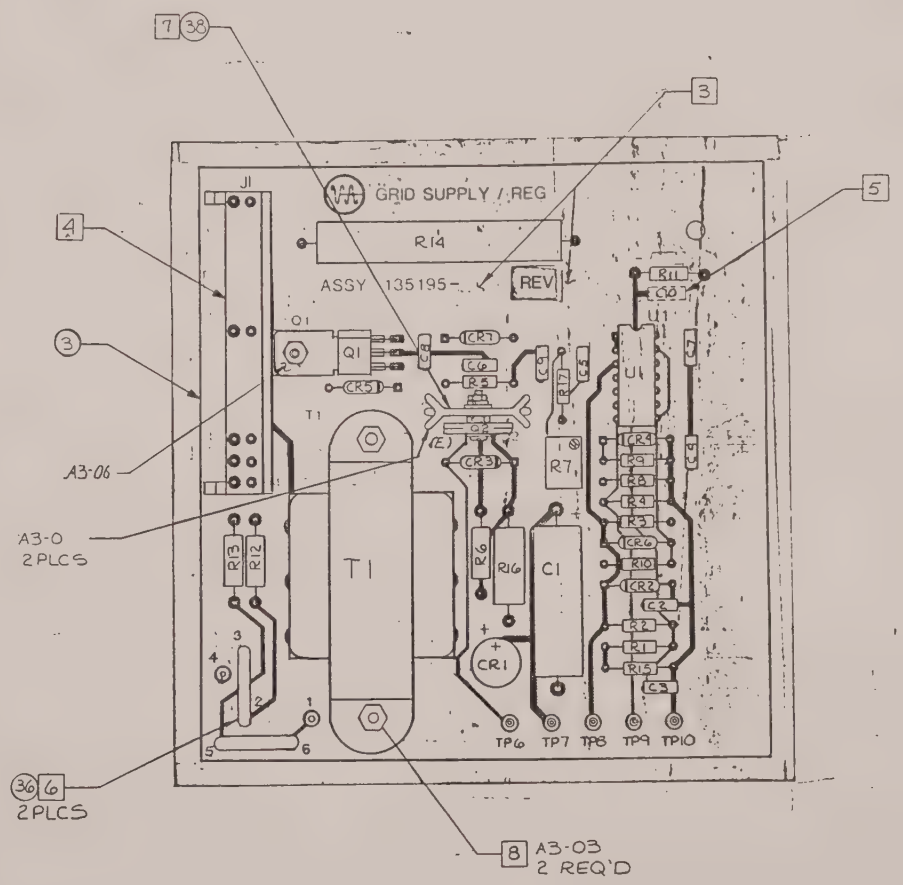

[8] HARDWARE FOR SUPPORT DURING STORAGE ONLY.
[7] APPLY THIN LAYER THERMAL COMPOUND UNDER Q2.
[6] FOR -00 VERSION JUMPER 3-2, 5-6; FOR-01 JUMPER 1-2, 4-5.
[5] OPTIONAL CAPACITOR, D.I.T.
[4] REMOVE PINS 2,3,4,5,6,8,9,10, & 11.
[3] MARK WITH CURRENT ASSY DASH NO. AND REV. LETTER.
2. ASSEMBLE USING HARDWARE PER DWG NO. 110625.
NOTES: 1. ASSEMBLE PER VARIAN WORKMANSHIP STD 87-800299.

SEE SEPARATE LIST OF MATERIALS, LM-135195

QTY	IDENTIFYING NUMBER	DESCRIPTION	CODE IDENT	ITEM
		LIST OF MATERIALS		R602

UNLESS OTHERWISE SPECIFIED DIMENSIONS ARE IN INCHES
DECIMALS: 1PL ± .1 2PL ± .02
3PL ± .005 FRAC ± 1/64
ANG ± 1° SURFACE FINISH
MATERIAL
SPEC NO
FINISH
NEXT ASSEMBLY | USED ON
APPLICATION

CONTRACT NUMBER
DR L. LAPPIN 7-11-80
CHK 7-5-80
APPD 4-6-81
APPD 5-11-81
DESIGN ACTIVITY APPROVAL
CUSTOMER APPROVAL

varian — MICROWAVE EQUIPMENT OPERATIONS, SANTA CLARA, CALIFORNIA

ASSEMBLY
GRID SUPPLY/REGULATOR

SIZE	CODE IDENT NO		
D	59782	135195	C

SCALE 2/1 SHEET OF

SUPERSEDES

135195

varian	MICROWAVE EQUIPMENT OPERATIONS	TITLE: GRID SUPPLY/REGULATOR	LM 135195	REV C
CODE IDENT NO. 59782	APPROVAL Jim Oraida DATE 5-12-81	C462A		

APPLICATION			REVISION				
NEXT ASSEMBLY	USED ON	EO	REV	DESCRIPTION	EO	DATE	APPROVED
			A	REVISED	—	1/30/81	JHH
			B	INCORP E.O.	15243	8-13-81	
			C	INCORP E.O.	15287	9-8-81	

DASH NO.	DESCRIPTION
-00	POSITIVE GRID
-01	NEGATIVE GRID

R602

REVISION STATUS

SHEET																										
LTR																										
SHEET																										
LTR																										
SHEET																										
LTR																										

varian	MICROWAVE EQUIPMENT OPERATIONS	GRID SUPPLY/REGULATOR	LM 135195	REV C

ITEM NO.	REF DES	DESCRIPTION	VARIAN PART NO.	MFG	MFG OR MS PART NO.	QTY/DASH NO. -00	-01	-02	-03
1		SCHEMATIC	D135192			ref	ref		
2									
3		FABRICATION	D135194			1	1		
4									
5	C1	CAPACITOR, ELECT., 10 µf 150V	41-509805	SPRAGUE	TVA-1406	1	1		
6	C2-4, C6,7	CAPACITOR, CERAMIC, .1 µf 100V	41-229952		CK06BX104K	5	5		
7	C8,9,5	CAPACITOR, CERAMIC, 100 pf 200V	41-229960		CK05BX101K	3	3		
8	C10	CAPACITOR, CERAMIC	D.I.T.		CK06				
9									
10									
11	CR1	RECTIFIER BRIDGE	66-235033	VARO	VE68	1	1		
12	CR2	DIODE, ZENER 12V	66-314742		1N4742	1	1		
13	CR3	DIODE, SIGNAL	66-304003		1N4003	1	1		
14	CR4,6,7	DIODE, SIGNAL	66-320914		1N914B	3	3		
15	CR5	DIODE, ZENER 56V 5W	66-335006		1N4976	1	1		
16	J1	CONNECTOR - 14 SOCKET	51-411012	MOLEX	09-52-3142	1	1		
17	Q1,2	TRANSISTOR, NPN	62-990224		2N6557	2	2		
18									
19	R1	RESISTOR, COMP., 68K 1/4W 5%	32-301568		RC07GF683J	1	1		
20	R2-4, 8,9,11	RESISTOR, COMP., 51K 1/4W 5%	32-301551		RC07GF513J	6	6		
21	R5	RESISTOR, COMP., 5.1K 1/4W 5%	32-301451		RC07GF512J	1	1		

varian	MICROWAVE EQUIPMENT OPERATIONS	GRID SUPPLY/REGULATOR	LM 135195	REV C

ITEM NO	REF DES	DESCRIPTION	VARIAN PART NO.	MFG	MFG OR MS PART NO.	QTY/DASH NO. -00	-01	-02	-03
22	R7	RESISTOR, VARIABLE 500K	36-797766	BOURNS	3272W-1-504	1	1		
23	R10	RESISTOR, COMP., 56K 1/4W 5%	32-301556		RC07GF563J	1	1		
24	R12,13	RESISTOR, COMP., 510Ω 1/2W 5%	32-201351		RC20GF511J	2	2		
25	R14	RESISTOR, THK FILM, 10M 3W 5%	31-600656	PYROFILM	PVC175	1	1		
26	R15	RESISTOR, COMP., 100Ω 1/4W 5%	32-301310		RC07GF101K	1	1		
27	R16	RESISTOR, COMP., 12K 1W 5%	33-301512		RC32GF123J	1	1		
28	R6	RESISTOR, COMP., 51K 1/2W 5%	32-201551		RC20GF513J	1	1		
29	R17	RESISTOR, COMP., 10K 1/4W 5%	32-301510		RC07GF103J	1	1		
30									
31	T1	TRANSFORMER	44-149144	TRIAD	F148XP	1	1		
32									
33	TP6-10	TEST JACK (RED)	51-451861	E.F.JOHNSON	105-0852-001	5	5		
34	U1	VOLTAGE QUAD COMPARITOR	62-600153	NSC	LM339N	1	1		
35									
36	JPR1,2	JUMPER	51-452 939	CAMBION	461-2872-05-03-10	2	2		
37									
38		HEATSINK (Q2)	66-899404	THERMALLOY	6025B	1	1		
39									
40		THERMAL COMPOUND	88-298900	WAKEFIELD	120-8	A/R	A/R		
41									
42									

REVISIONS					
ZONE	LTR	DESCRIPTION	EO	DATE	APPROVED
	A	REVISED C1 WAS 400V Q1 & Q2 WRONG CHG	—	2-5-81	JB
	B	INC E O	20961	4 30 84	JK/DKM

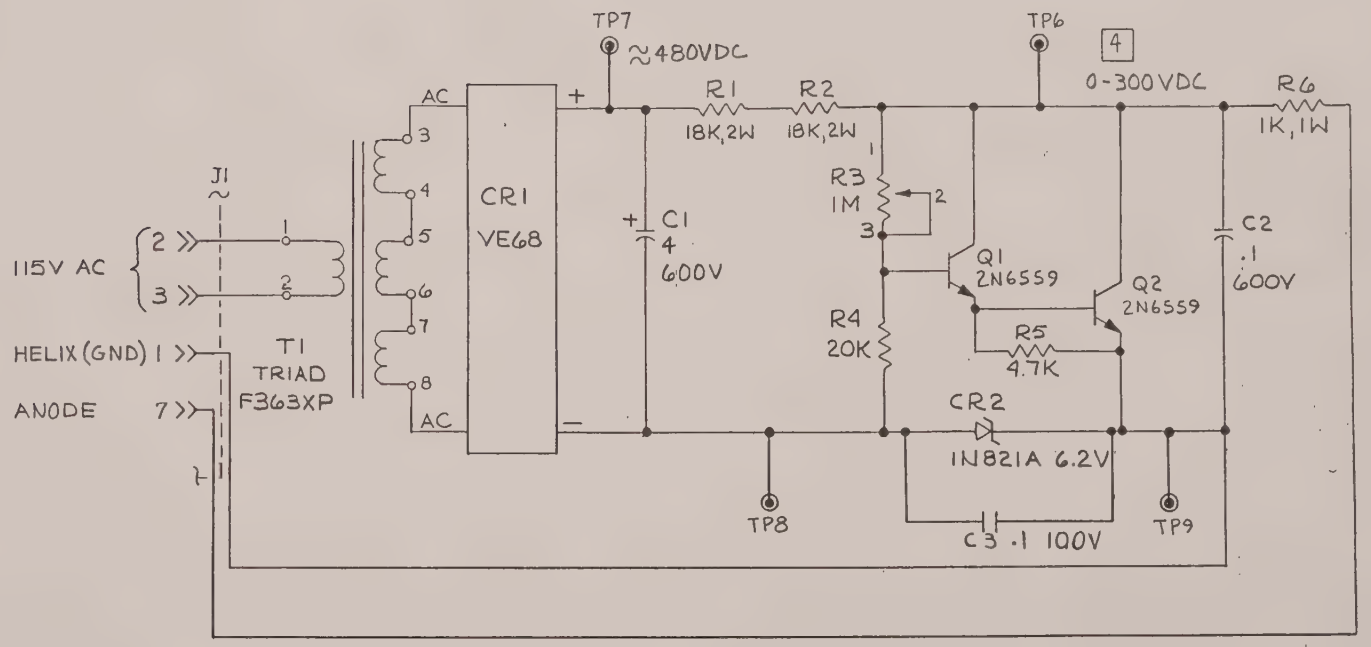

4 TP6 VOTAGE REF TP9

3 ALL VOLTAGES REF TP8 EXCEPT TP6

2. ALL CAPACITOR VALUES ARE IN MICRO-FARADS.

1. ALL RESISTOR VALUES ARE IN OHMS

NOTES: 1/4W 5% COMP.

QTY	IDENTIFYING NUMBER	DESCRIPTION	CODE IDENT	ITEM
		LIST OF MATERIALS		R602

		UNLESS OTHERWISE SPECIFIED DIMENSIONS ARE IN INCHES	CONTRACT NUMBER
		DECIMALS: 1PL ± .1 2PL ± .02	DR L.LAPPIN 7-18-80
		3PL ± .005 FRAC ± 1/64	CHK J.Day 2-5-81
		ANG ± 1° SURFACE FINISH ✓	APPD Lowell Barnes 2-6-81
		MATERIAL	APPD Juna Ormel 5-11-81
D135197	E135216		DESIGN ACTIVITY APPROVAL
NEXT ASSEMBLY	USED ON	SPEC NO.	CUSTOMER APPROVAL
APPLICATION		FINISH	

varlan — MICROWAVE EQUIPMENT DIVISION, SANTA CLARA, CALIFORNIA

SCHEMATIC, ANODE SUPPLY

SIZE	CODE IDENT NO.		
C	59782	135196	B

SCALE NONE SHEET 1 OF 1

SUPERSEDES

MICROFILM

135196

REVISIONS					
ZONE	LTR	DESCRIPTION	ECO	DATE	APPROVED
	A	REVISED	–	1/29/81	
	B	INCORP E.O	15259	8/13/81	
	C	INCORP E.O	20461	4/10/84	

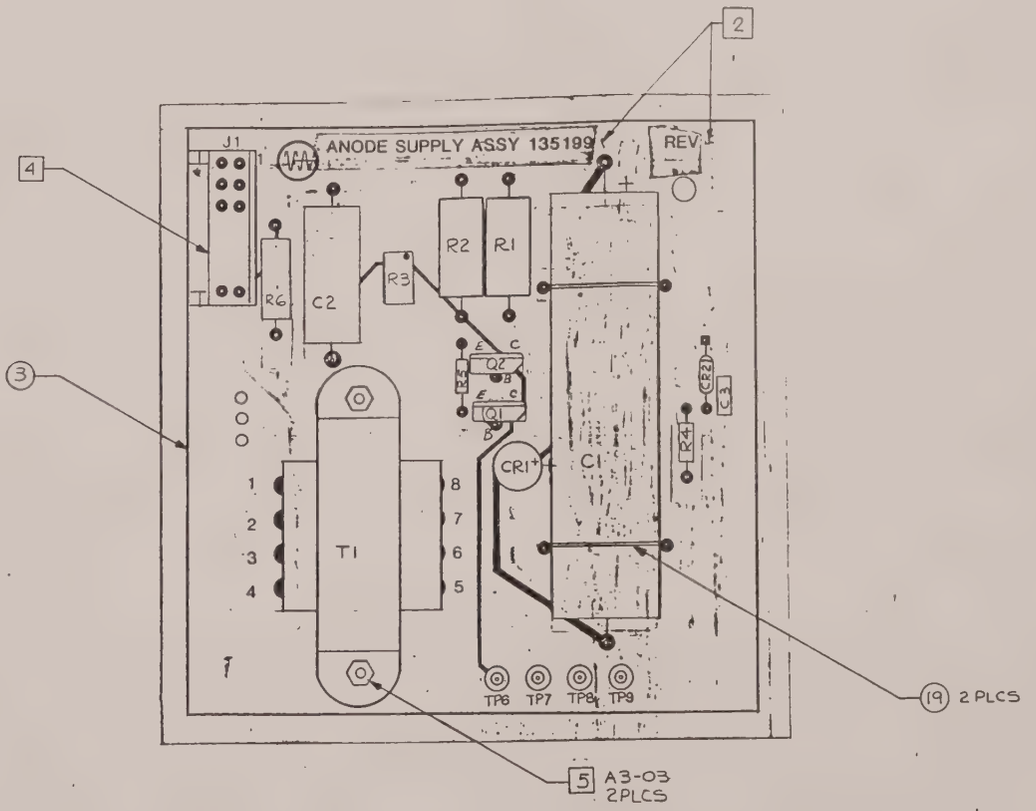

5 HARDWARE FOR SUPPORT DURING STORAGE.
4. REMOVE PINS 4,5, AND 6.
3 ASSEMBLE USING HARDWARE PER DWG NO. 110625.
2. MARK WITH CURRENT DASH NO. & REVISION LETTER OF ASSY.
1. ASSEMBLE PER VARIAN WORKMANSHIP STD 87-800299.

NOTES: UNLESS OTHERWISE SPECIFIED

SEE SEPARATE LIST OF MATERIALS-LM135199

QTY	IDENTIFYING NUMBER	DESCRIPTION	CODE IDENT	ITEM
		LIST OF MATERIALS		R602

UNLESS OTHERWISE SPECIFIED DIMENSIONS ARE IN INCHES	CONTRACT NUMBER	varian – MICROWAVE EQUIPMENT DIVISION SANTA CLARA, CALIFORNIA	
DECIMALS 1PL ± 1 2PL ± 02	DR L LAPPIN 7-14-80	ASSEMBLY	
3PL ± 005 FRAC ± 1 64	CHK J. Key 2-5-81	ANODE SUPPLY	
ANG ± 1° SURFACE FINISH ✓	APPD T Barbo 5-11-81		
MATERIAL	APPD Jim Orrill 5-11-81		
NEXT ASSEMBLY USED ON	DESIGN ACTIVITY APPROVAL	SIZE D / CODE IDENT NO 59782 / 135199 / C	
APPLICATION	CUSTOMER APPROVAL	SCALE 2/1 SHEET 1 OF 1	
SPEC NO		SUPERSEDES	
FINISH			

135199 D

varian	MICROWAVE EQUIPMENT OPERATIONS	TITLE: ANODE SUPPLY	LM 135199	REV C
CODE IDENT NO 59782	APPROVAL	DATE		0463A

APPLICATION			REVISION				
NEXT ASSEMBLY	USED ON	EO	REV	DESCRIPTION	EO	DATE	APPROVED
			A	REVISED	-	1/29/81	JHT/JD
			B	INCORP. E.O.	15259	8/13/81	RJ
			C	INC. E.O.	20961	4/30/84	JK/ D. KH.

REVISION STATUS

SHEET																										
LTR																										
SHEET																										
LTR																										
SHEET																										
LTR																										

varian	MICROWAVE EQUIPMENT OPERATIONS	ANODE SUPPLY	LM 135199	REV C

ITEM NO	REF DES	DESCRIPTION	VARIAN PART NO.	MFG	MFG OR MS PART NO.	QTY/DASH NO. -00	-01	-02	-03
1		SCHEMATIC	C135196			R			
2									
3		FABRICATION	D135198			1			
4									
5	C1	CAPACITOR, 4uf, 600V	41-508893	SPRAGUE	TVA1960	1			
6	C2	CAPACITOR, .1uf, 600V	41-718813	SPRAGUE	#431P10496	1			
7	C3	CAPACITOR, .1uf, 100V	41-229952		CK06BX104K	1			
8	CR1	DIODE, BRIDGE	66-235033	VARO	VE68	1			
9	CR2	DIODE, ZENER, 6.2V	66-310821		1N821A	1			
10	J1	CONNECTOR, 7 CIRCUIT	51-411011	MOLEX	09-52-3072	1			
11	Q1,2	TRANSISTOR, NPN	62-990245		2N6559	2			
12									
13	R1,2	RESISTOR, C.C., 18K, 2W, 5%	34-402518		RC42GF183K	2			
14	R3	POTENTIOMETER, 1M	36-797538	BOURNS	3292W-1-105	1			
15	R4	RESISTOR, C.C., 20K, 1/4W, 5%	32-301520		RC07GF203J	1			
16	R5	RESISTOR, C.C., 4.7K, 1/4W, 5%	32-301447		RC07GF472J	1			
17	R6	RESISTOR, C.C., 1K, 1W, 5%	33-301410		RC32GF102J	1			
18									
19		CABLE TIE, (C1)	22-119653			2			
20	T1	TRANSFORMER	44-149143	TRIAD	F363XP	1			
21	TP6-9	TEST JACK (RED)	51-051861	E.F. JOHNSON	105-0852-001	4			

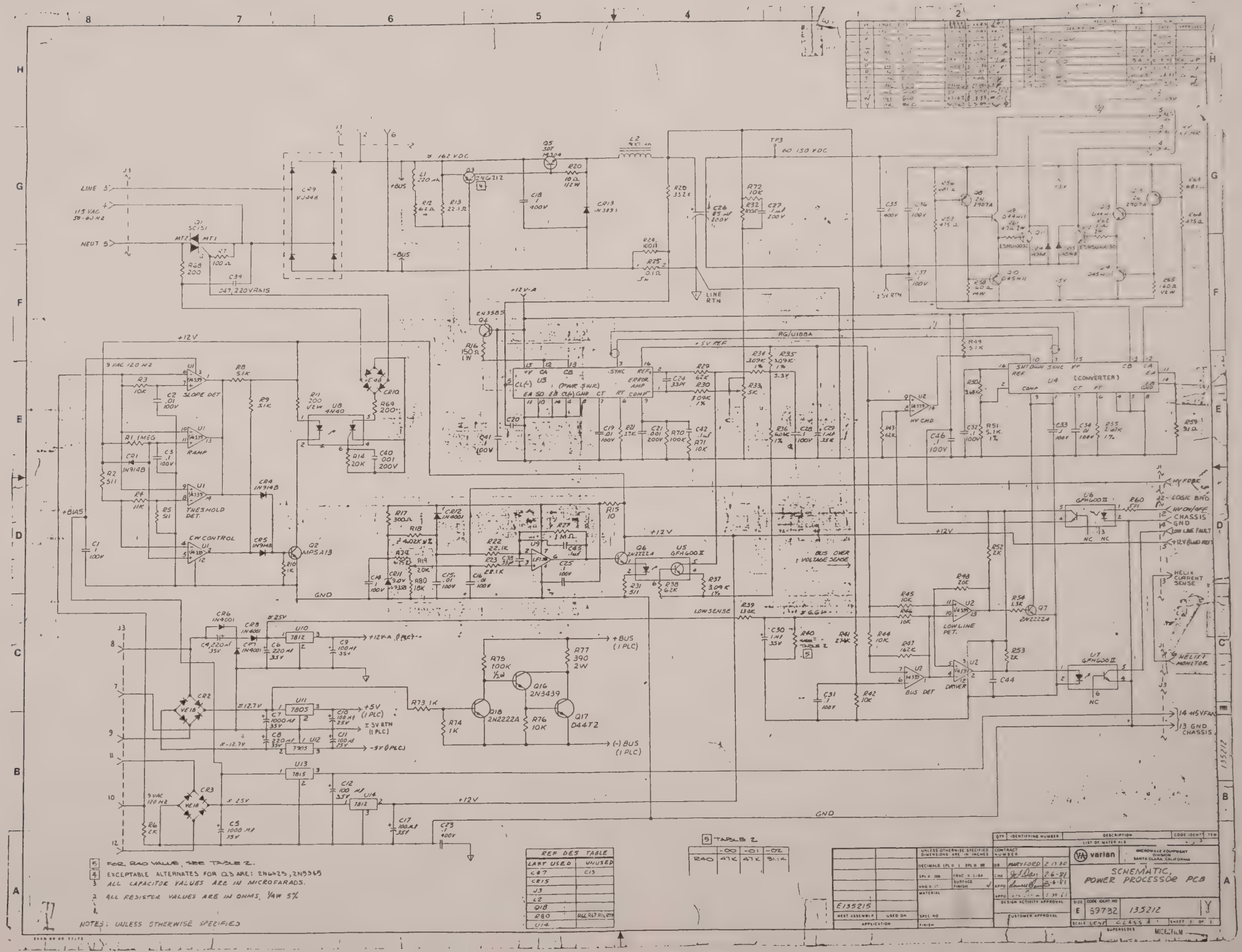

5 FOR R40 VALUE, SEE TABLE 2.

4 EXCEPTABLE ALTERNATES FOR Q3 ARE: 2N6425, 2N5365

3 ALL CAPACITOR VALUES ARE IN MICROFARADS.

2 ALL RESISTOR VALUES ARE IN OHMS, 1/4W 5%

1

NOTES: UNLESS OTHERWISE SPECIFIED

REF DES TABLE	
LAST USED	UNUSED
C87	C13
CR15	
J3	
L2	
Q18	
R80	R66, R67, R71, R73
U14	

5 TABLE 2

	-00	-01	-02
R40	47K	47K	51.1K

QTY	IDENTIFYING NUMBER	DESCRIPTION	CODE IDENT	ITEM
		LIST OF MATERIALS		

UNLESS OTHERWISE SPECIFIED DIMENSIONS ARE IN INCHES

DECIMALS 1PLX ± 1 2PLX ± 2

SPEC NO

FINISH

MATERIAL

SURFACE FINISH

E135215

NEXT ASSEMBLY | USED ON

APPLICATION

CONTRACT NUMBER

DR MARYFORD 2-13-80

CHK 2-6-81

APPD 3-6-81

APPD 1-30-81

DESIGN ACTIVITY APPROVAL

CUSTOMER APPROVAL

varian

MICROWAVE EQUIPMENT DIVISION SANTA CLARA, CALIFORNIA

SCHEMATIC, POWER PROCESSOR PCB

SIZE E | CODE IDENT NO 59732 | 135212 | Y

SCALE NONE | CLASS A | SHEET 3 OF 1

SUPERSEDES MICROFILM

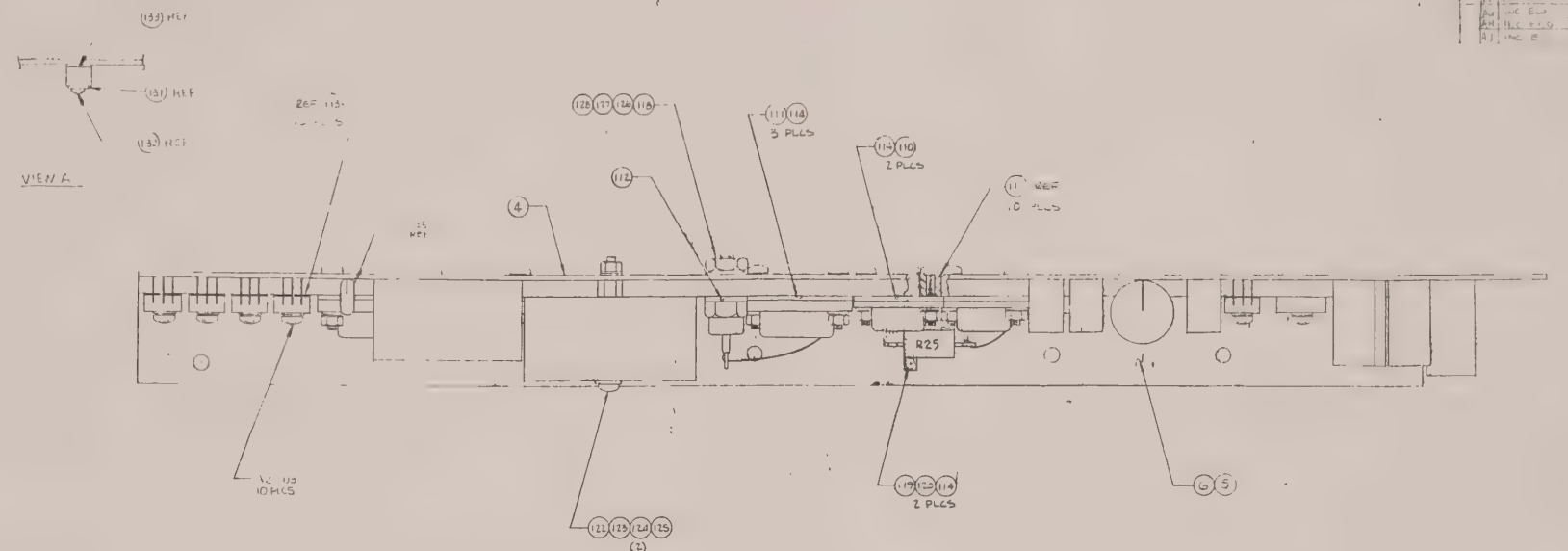

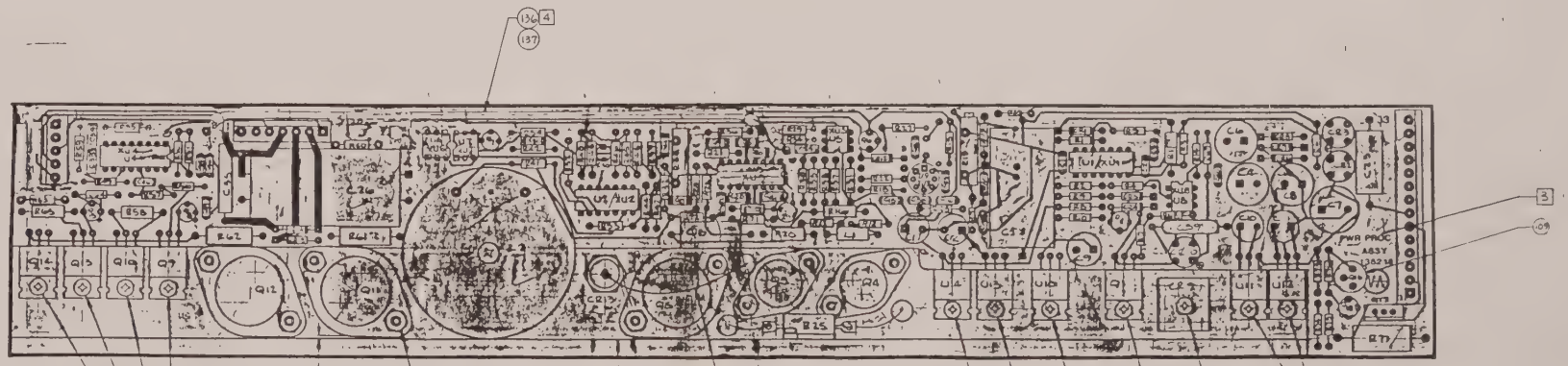

[1] ASSEMBLE CABLE ASSY ITEM (6) BELOW TOP OF PC BOARD AT THE END SIDE AS SHOWN. SECURE IN PLACE WITH EPOXY ITEM (7)

[5] MARK WITH DASH NO. & COMPLETE ASSY. SERIAL LETTER OF ASSY.

2. ASSEMBLE USING HARDWARE DRAWING 110625.

1. ASSEMBLE PER VARIAN WORKMANSHIP STANDARD 87-800-299.

NOT...

[3] FOR -00 & -02 VERSIONS ASSEMBLE COMPONENTS AS SHOWN FOR -01 VERSION ASSEMBLE COMPONENTS PER VIEW A

/ TRIM EXCESSIVE CONNECTOR LEADS ON U13 AFTER SOLDERING.

[8] CLEAN MOUNTING SURFACE ON HEATSINK PRIOR INSTALLATION OF ITEM (12) OR (13)

5. PHANTOMED COMPONENTS ARE USED FOR SPECIAL APPLICATIONS ONLY.

SEE SEPARATE LIST OF MATERIAL -LM135215

QTY	IDENTIFYING NUMBER	DESCRIPTION	CODE IDENT	ITEM
		LIST OF MATERIALS		

varian — MICROWAVE EQUIPMENT DIVISION, SANTA CLARA, CALIFORNIA

ASSEMBLY
PWR PROCESSOR PCB

SIZE	CODE IDENT NO	DWG NO	REV
E	59782	135215	AJ

SCALE 2/1 — SHEET 1 OF 1

NEXT ASSEMBLY — USED ON — APPLICATION

SUPERSEDES

MICROFILM

varian	MICROWAVE EQUIPMENT OPERATIONS	TITLE: POWER PROCESSOR PCB	LM 135215	REV AJ
CODE IDENT NO 59782	APPROVAL DATE			0463A

APPLICATION			REVISION				
NEXT ASSEMBLY	USED ON	EO	REV	DESCRIPTION	EO	DATE	APPROVED
135215			W	INC. E.C.O.	24477	9/27/85	KC/ML
			Y	INC. E.C.O.	26118	5/2/86	SN/LB
			AA	INC. E.C.O.	26883	8/13/86	JK/HW
-00 = K SERIES -01 = 25/50W KU			AB	INC. E.C.O.	28097	4/21/87	SN/ML/MT
			AC	INC. E.C.O.	29073	1/8/88	KC/ML/HW
			AD	INC. E.C.O.	29186	1/27/88	LB/ML/JS
			AE	INC. E.C.O.	29557	5/31/88	LB/MT
			AF	INC ECO	30111	8/19/88	ML
			AG	INC ECO	30142	8/19/88	ML
			AH	INC ECO	30186	9/21/88	
			AJ	INC ECO	30567	2-3-89	TM

REVISION STATUS

SHEET																									
LTR																									
SHEET																									
LTR																									
SHEET																									
LTR																									

varian	MICROWAVE EQUIPMENT OPERATIONS	POWER PROCESSOR PCB ASSY		LM 135215		REV AJ			
ITEM NO	REF DES	DESCRIPTION	VARIAN PART NO.	MFG	MFG OR MS PART NO	QTY./DASH NO			
						-00	-01	-02	-03
1		SCHEMATIC	135212			R	R	R	
2									
3									
4		FABRICATION	135214			1	1	1	
5		HEATSINK	135217-01			-	1	-	
6		HEATSINK	135217			1	-	1	
7	C39	CAPACITOR, FILM, .047±58 270VAC 400VDC	41-708769	SPRAGUE	439P4730220	1	1	1	
8	C1,3.14,	CAPACITOR, CERAMIC, .1 uf, 100V	41-229952		CK06BX104K	15	15	15	
	25,28,31-								
	33,36,37,								
	41,42,44-								
	46								
9	C21,40	CAPACITOR, CERAMIC, .001 uf, 200V	41-229953		CK05BX102K	2	2	2	
10	C2,15,16,	CAPACITOR, CERAMIC, .01 uf, 100V	41-229963		CK05BX103K	5	5	5	
	19,20								
11	C4,6,8	CAPACITOR, ELECT., 220 uf, 35V	41-503904	SPRAGUE	503D27F035PE	3	3	3	
12	C5	CAPACITOR, ELECT., 1000 uf, 40V	41-505891	SIEMENS	B41010-1000/40/82000	1	1	1	
13	C9,12,17	CAPACITOR, ELECT., 100 uf, 35V	41-516722	SPRAGUE	S#503D107F035ND	3	3	3	
14	C10,11	CAPACITOR, ELECT., 100 uf, 20V	41-503903	SPRAGUE	672D107H020CG5C	2	2	2	
15	C30,29	CAPACITOR, TANT., 1 uf, 50V	41-609459	SPRAGUE	196D105X9050HA1	2	2	2	
16	C18,35	CAPACITOR, W&F, .1 uf, 400V	41-749981	SIEMENS	B32231.1/20/400/5200	2	2	2	

varian	MICROWAVE EQUIPMENT OPERATIONS	POWER PROCESSOR PCB ASSY	LM 135215	REV AJ

ITEM NO	REF DES	DESCRIPTION	VARIAN PART NO	MFG	MFG OR MS PART NO	QTY/DASH NO -00	01	-02	-03
38	Q1	THYRISTOR, TRIAC, 400V	01008591		SC151D (SCREENED)	1	1	1	
39	Q6,7,18	TRANSISTOR, NPN	62-912222		2N2222A	3	3	3	
40	Q3	TRANSISTOR, PNP SWITCH	62-906212		2N6212	1	1	1	
	Q3 (ALT)	TRANSISTOR, PNP SWITCH	62-905345		2N5345	R	R	R	
	Q3 (ALT)	TRANSISTOR, PNP SWITCH	62-906425		2N6425	R	R	R	
41	Q4	TRANSISTOR, NPN	62-903585		2N3585	1	1	1	
42	Q5	TRANSISTOR, NPN	62-989814	SOLITRON DEVICES	SDT14304	1	1	1	
43	Q8,15	TRANSISTOR, PNP	62-912907		2N2907A	2	2	2	
44	Q9,13	TRANSISTOR, NPN	62-798003	G.E.	D44H11	2	2	2	
45	Q10,14	TRANSISTOR, PNP	62-798008	G.E.	D45H11	2	2	2	
46	Q11,12	TRANSISTOR, NPN	62-989771	GSI	GSRU10030	2	2	2	
47	Q2	TRANSISTOR, NPN	62-920023	MOTOROLA	MPSA13	1	1	1	
48	Q16	TRANSISTOR, NPN	62-903439		2N3439	1	1	1	
49	Q17	TRANSISTOR, NPN	62-798026	G.E.	D44T2	1	1	1	
50	R1,27	RESISTOR, M.F., 1M OHM, 1/4W, 1%	31-102501			2	2	2	
51	R2,5,31,	RESISTOR, M.F., 511 OHM, 1/4W, 1%	31-102185			4	4	4	
	R60								
52	R3,42,44,	RESISTOR, M.F., 10K OHM, 1/4W, 1%	31-102309			8	8	8	
	45,46,71,								
	72,76								
53	R4	RESISTOR, M.F., 11K OHM, 1/4W, 1%	31-102313			1	1	1	

varian	MICROWAVE EQUIPMENT OPERATIONS	POWER PROCESSOR PCB ASSY	LM 135215	REV AJ

ITEM NO	REF DES	DESCRIPTION	VARIAN PART NO.	MFG	MFG OR MS PART NO	QTY/DASH NO			
						-00	01	-02	-03
54	R6,52,53	RESISTOR, M.F., 2K OHM, 1/4W, 1%	31-102242			3	3	3	
55	R7,24	RESISTOR, M.F., 100 OHM, 1/4W, 1%	31-102117			2	2	2	
56	R8,9,49	RESISTOR, M.F., 5.1K OHM, 1/4W, 1%	31-102281			3	3	3	
57	R10,73,74	RESISTOR, M.F., 1K OHM, 1/4W, 1%	31-102213			3	3	3	
58	R11	RESISTOR, M.F., 200 OHM, 1/2W, 1%	31-614669			1	1	1	
59	R12	RESISTOR, M.F., 62 OHM, 1/4W, 1%	31-102097			1	1	1	
60	R56,63	RESISTOR, M.F., 681 OHM, 1/4W, 1%	31-102197			2	2	2	
61	R16	RESISTOR, M.F., 300 OHM, 1W, 1%	31-463150			1	1	1	
62	R17	RESISTOR, M.F., 300 OHM, 1/4W, 1%	31-223301			1	1	1	
63	R36	RESISTOR, M.F., 6.04K OHM, 1/4W, 1%	31-102288		RN55	1	1	1	
64	R19	RESISTOR, VAR., 20K OHM, 3/4W, 10%	36-792212	BOURNS	3006P-1-203	1	1	1	
65	R20	RESISTOR, M.F., 10 OHM, 1/2W, 1%	32-501210			1	1	1	
66	R21	RESISTOR, M.F., 3.9K 1/4W, 1%	31-102270			1	1	1	
67	R22,23	RESISTOR, M.F., 22.1K OHM, 1/4W, 1%	31-102342			2	2	2	
68									
69	R25	RESISTOR, W.W., 0.1 OHM, 5W	31-575107	DALE	RH-5 SERIES	1	1	1	
70	R28	RESISTOR, M.F., 33.2K, 1/4W, 1%	31-102359			-	1	-	
71	R55	RESISTOR, M.F., 2.67K, 1/4W, 1%	31-102254			1	1	1	
72	R40	RESISTOR, M.F., 47K OHM, 1/4W, 1%	31-102374			1	1	-	
	R40	RESISTOR, M.F., 51.1K OHM, 1/4W, 1%	31-102377			-	-	1	
73	R29,38,43	RESISTOR, M.F., 62K OHM, 1/4W, 1%	31-102385			3	3	3	

varian	MICROWAVE EQUIPMENT OPERATIONS	POWER PROCESSOR PCB ASSY	LM 135215	REV AJ

ITEM NO	REF DES	DESCRIPTION	VARIAN PART NO.	MFG	MFG OR MS PART NO	QTY/DASH NO			
						-00	01	-02	-03
74	R30,34,	RESISTOR, M.F., 3.09K OHM, 1/4W, 1%	31-102260			4	4	4	
	R35,37								
75	R32,70	RESISTOR, M.F., 100K OHM, 1/4W, 1%	31-102405			2	2	2	
76	R33	RESISTOR, VAR., 5K OHM, 3/4W, 10%	36-792218	BOURNS	3006P-1-502	1	1	1	
77	R39	RESISTOR, M.F., 130K OHM, 1/4W, 1%	31-102416			1	1	1	
78	R41	RESISTOR, M.F., 274K OHM, 1/4W, 1%	31-102447			1	1	1	
79	R47	RESISTOR, M.F., 162K OHM, 1/4W, 1%	31-102425			1	1	1	
80	R48,14	RESISTOR, M.F., 20K OHM, 1/4W, 1%	31-102338			2	2	2	
81	R80	RESISTOR, M.F., 17.8K, 1/4W, 1%	31-102333			1	1	1	
82	R54	RESISTOR, M.F., 1.3K OHM, 1/4W, 1%	31-102224			1	1	1	
83	R50	RESISTOR, M.F., 3.65K OHM, 1/4W, 1%	31-102267			1	1	1	
84	R57,64	RESISTOR, M.F., 475 OHM, 1/4W, 1%	31-102182			2	2	2	
85	R58,65	RESISTOR, M.F., 160 OHM, 1/2W, 1%	32-201316		RC20GF161J	2	2	2	
86	R59	RESISTOR, M.F., 91 OHM, 1/4W, 1%	31-102113			1	1	1	
87	R61,62	RESISTOR, NONINDUCT., 4.7 OHM, 2W, 5%	31-402138	AIRCO SPEER	M02-4.7	2	2	2	
88	R68,69	RESISTOR, M.F., 200 OHM, 1/4W, 1%	32-102146			2	2	2	
89	R15	RESISTOR, M.F., 10 OHM, 1/4W, 1%	31-102021			1	1	1	
90	R77	RESISTOR, COMP., 390 OHM, 2W, 5%	34-401339		RC42GF391J	1	1	1	
91	R75	RESISTOR, M.F., 100K, 1/2W, 1%	32-201610		RC20GF104J	1	1	1	
92									
93	R51	RESISTOR, M.F., 5.1K, 1/4W, 1%	31-102281			1	1	1	

varian	MICROWAVE EQUIPMENT OPERATIONS	POWER PROCESSOR PCB ASSY	LM 135215	REV AJ

ITEM NO	REF DES	DESCRIPTION	VARIAN PART NO	MFG	MFG OR MS PART NO	QTY/DASH NO			
						-00	-01	-02	-03
94	R18	RESISTOR, M.F., 4.02K, 1/4W, 1%	31-102271			1	1	1	
95	U1,U2	I.C., QUAD COMPARATOR	62-601270	NATIONAL SEMI	LM339AN	2	2	2	
96	U3,U4	I.C. REGULATOR AND CONVERTER	62-602180	SILICON GEN	SG1524BJ	2	2	2	
97	U5-U7	I.C. OPTO ISOLATOR	66-599927		GFH600II	3	3	3	
98	U8	I.C. OPTO SCR	66-599722		4N40	1	1	1	
99	U9	I.C. OP AMPL, FET	62-600963	NATIONAL SEMI	LF-156H	1	1	1	
100	U12	I.C. REGULATOR, 5 VOLT	62-600482	MOTOROLA	MC7905CT	1	1	1	
101	U10,14	I.C. REGULATOR, +12 VOLT	62-600495	MOTOROLA	MC7812CT	2	2	2	
102	U11	I.C. REGULATOR, +5 VOLT	62-600497	MOTOROLA	MC7805CT	1	1	1	
103	U13	I.C. REGULATOR, +15 VDC	62-600496	MOTOROLA	MC7815CT	1	1	1	
104	XU3,XU4	SOCKET, I.C., 16 PIN	54-910404	AMP	640358-3	2	2	2	
105	XU5-XU8	SOCKET, I.C., 6 PIN	54-910329	ROBINSON-NUGENT	ICN-063-S3-G	4	4	4	
106	XU1,XU2	SOCKET, I.C., 14 PIN	54-910403	AMP	640357-3	2	2	2	
107	XU9	SOCKET, 8 PIN	54-634106	AUGAT	8058-39G4	1	1	1	
108		TRANSISTOR PAD	62-899960			1	1	1	
109									
110		INSULATOR, TO-66	62-898003	UNION CARBIDE	H-4004	2	2	2	
111		INSULATOR, TO-3	62-898002	UNION CARBIDE	H-4001	3	3	3	
112		INSULATOR, DO-4	62-898000	UNION CARBIDE	H-4027	1	1	1	
113		INSULATOR, PLASTIC	62-899654	BERGQUIST	7403-09FR-51	10	-	10	
114		THERMAL COMPOUND	88-298900	WAKEFIELD	#120-8	AR	AR	AR	

varian	MICROWAVE EQUIPMENT OPERATIONS	POWER PROCESSOR PCB ASSY	LM 135215	REV AJ

ITEM NO	REF DES	DESCRIPTION	VARIAN PART NO	MFG	MFG OR MS PART NO	QTY/DASH NO			
						-00	-01	-02	-03
115									
116		WIRE, "EE", TEFLON INSUL, #20 WHT	81-288834			AR	AR	AR	
117		BUSHING	22-420036	AMATOM	9223-N-115	10	10	10	
118		BUSHING	22-420037	AMATOM	9284-N-194	1	1	1	
119		SCREW, PAN HD, #2-56 x 1/4	12-222002-04			2	2	2	
120		WASHER, LOCK, INTERNAL TOOTH	14-301102			2	2	2	
121									
122		SCREW, PAN HD. #4-40 x 1-3/4	12-222004-26			1	1	1	
123		NUT, #4-40	13-102004			1	1	1	
124		WASHER, FLAT, #4	14-122004			2	2	2	
125		WASHER, LOCK, #4	14-202004			1	1	1	
126		NUT, #10-32	13-102061			1	1	1	
127		WASHER, FLAT, #10	14-122010			1	1	1	
128		WASHER, LOCK, #10	14-202010			1	1	1	
129		WASHER, FLAT, NYLOIN, #4	14-999702			1	1	1	
130		WASHER, INSULASTION	62-991000	RCA OR EQUIV.	DF137A	10	-	10	
131		WASHER, FLAT, 6-32	14-122006			-	10	-	
132		SCREW, NYLON WITH METAL CORE	12-980003	MICRO PLASTICS	390632W025	-	10	-	
133		INSULATOR, PLASTIC	62-899670	CHOMERICS	60-11-5791-1671	-	10	-	
134									
135									

varian	MICROWAVE EQUIPMENT OPERATIONS	POWER PROCESSOR PCB ASSY	LM 135215	REV AJ

ITEM NO	REF DES	DESCRIPTION	VARIAN PART NO.	MFG	MFG OR MS PART NO	QTY/DASH NO			
						-00	-01	-02	-03
136		CABLE ASSY	01000111			1	1	1	
137		EPOXY	88-199918	TRABOND	2112	AR	AR	AR	
138									
139									
140									
141	R79	RESISTOR, M.F., 4.75K, 1/4W, 1%	31-102278			1	1	1	
142									
143									

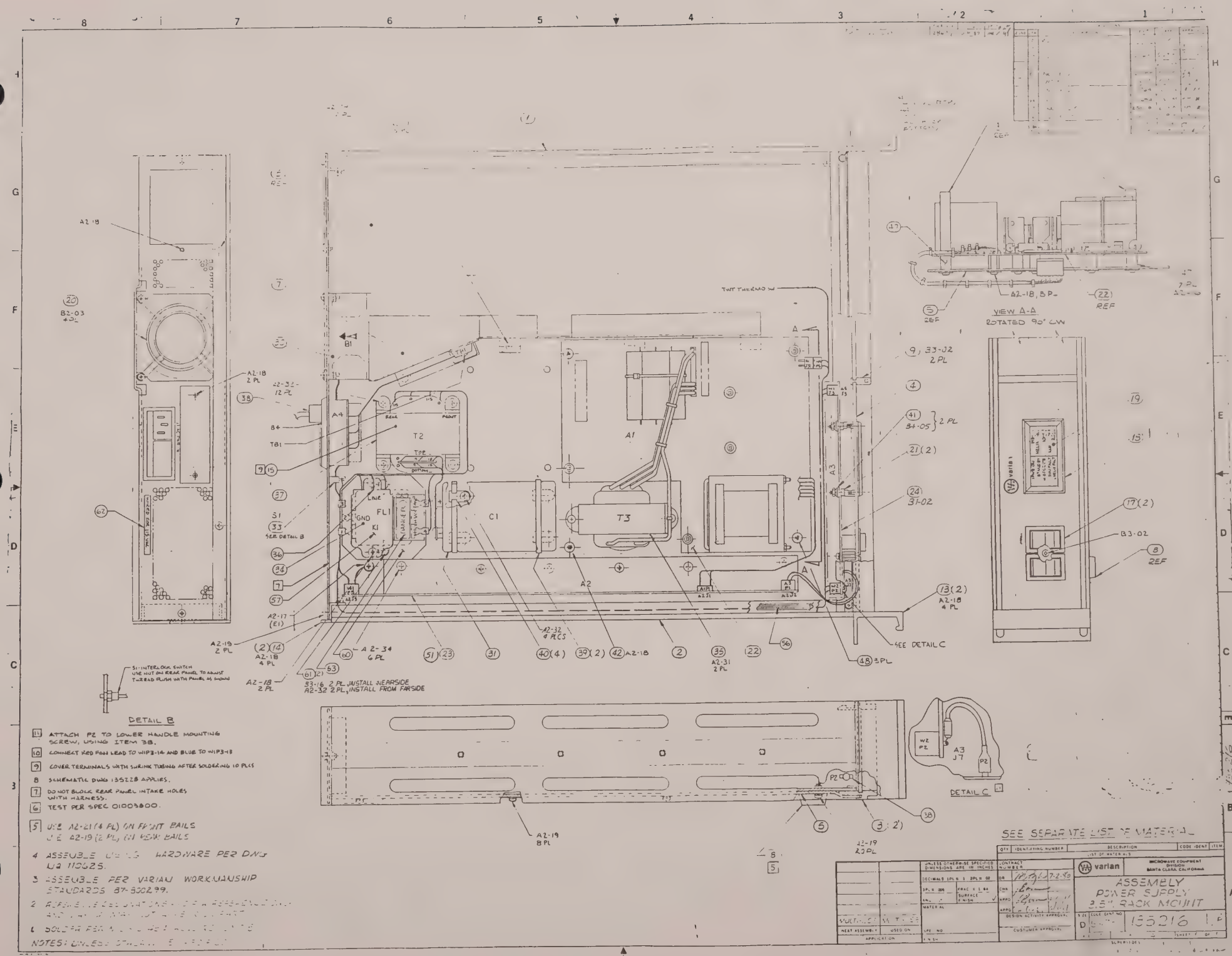

VIEW A-A
ROTATED 90° CW
DETAIL B
DETAIL C
SEE DETAIL B
SEE DETAIL C
TWT THERMO SW
A2-18, 8 PL
A2-18 2 PL
A2-32 12 PL
B2-03 4 PL
B3-02 2 PL
B4-05 2 PL
B1-02
A2-18 4 PL
A2-19 2 PL
A2-18 4 PL
A2-18 2 PL
A2-17 (E1)
A2-34 6 PL
A2-32 4 PLCS
A2-31 2 PL
A2-18
A2-19 8 PL
A2-19 20 PL
B3-16 2 PL, INSTALL NEARSIDE
A2-32 2 PL, INSTALL FROM FARSIDE
B3-02
S1-INTERLOCK SWITCH
USE NUT ON REAR PANEL TO ADJUST THREAD FLUSH WITH PANEL AS SHOWN
11 ATTACH P2 TO LOWER HANDLE MOUNTING SCREW, USING ITEM 38.
10 CONNECT RED FAN LEAD TO WIP3-14 AND BLUE TO WIP3-13
9 COVER TERMINALS WITH SHRINK TUBING AFTER SOLDERING 10 PLCS
8 SCHEMATIC DWG 135228 APPLIES.
7 DO NOT BLOCK REAR PANEL INTAKE HOLES WITH HARNESS.
6 TEST PER SPEC 01003800.
5 USE A2-21 (4 PL) ON FRONT BAILS
USE A2-19 (2 PL) ON REAR BAILS
4 ASSEMBLE USING HARDWARE PER DWG NO 110625.
3 ASSEMBLE PER VARIAN WORKMANSHIP STANDARDS 87-300299.
NOTES: UNLESS OTHERWISE SPECIFIED
SEE SEPARATE LIST OF MATERIAL
varian
MICROWAVE EQUIPMENT DIVISION SANTA CLARA, CALIFORNIA
ASSEMBLY POWER SUPPLY 3.5" RACK MOUNT
135216

varian	MICROWAVE EQUIPMENT OPERATIONS	TITLE: SERIES "K" 3-1/2" POWER SUPPLY	LM 135216	REV P
CODE IDENT NO 59782	APPROVAL J.B. 6/16/81	DATE JUNE ORNIDO	0458A	

APPLICATION			REVISION				
NEXT ASSY	USED ON	EO	REV	DESCRIPTION	EO	DATE	APPROVED
			F	INC. E.O.	17237	9/27/82	JS/AE
			G	INC. E.O.	17764	12/1/82	CB/LA
			H	INC. E.O.	22694	1/31/85	MM/ML
			J	INC. E.C.O.	25478	2/25/86	ML
			K	INC. E.C.O.	26175	5/7/86	SN/M.T.
			L	INC. E.C.O	26587	7-11-86	mc HK
			M	INC, E.C.O.	27974	3-24-87	KCM
			N	INC. E.C.O	28444	7-2-87	JI/MC
			P	INC ECO	28699	10-14-87	MC/MT

REVISION STATUS

SHEET																										
LTR																										
SHEET																										
LTR																										
SHEET																										
LTR																										

varian	MICROWAVE EQUIPMENT OPERATIONS	SERIES "K" 3-1/2" POWER SUPPLY	LM 135216	REV. P

ITEM NO	REF DES	DESCRIPTION	VARIAN PART NO.	MFG	MFG OR MS PART NO.	QTY/DASH NO. -00	-01	-02	-03
1		SIDE PANEL, MOD. RT.	112871-00			1			
2		SIDE PANEL, MOD. LT.	129507-00			1			
3		EXTRUSION, MOD.	133039-05			2			
4		FRONT PANEL, LEFT	135200-00			1			
5		BASEPLATE	135201-00			1			
6									
7		SHROULD, AIR DUCTING	135203-00			1			
8		FEET & BAIL ASSY	113808-48			1			
9		SUPPORT, FRONT PANEL	134437-01			1			
10		SCHEMATIC DIAGRAM	135228-01			R			
11		OUTLINE DRAWING	135223			R			
12									
13		HANDLE	113808-22			2			
14		REAR TRIM	113808-13			2			
15		SHRINK TUBING 1/4" I.D.	88-488009			AR			
16									
17		BEZEL, ROCKER SWITCH	01000015			2			
18		BEZEL, DISPLAY	76-999953	IEE	DMH23441K-04	1			
19		LENS, DISPLAY	135191-03			1			
20		FINGER GUARD	20-839826	PAMOTOR	5508	1			
21		SPACER, .25 LONG	22-429900	AMATOM	8102-B-0440-3A	2			

varian	MICROWAVE EQUIPMENT OPERATIONS	SERIES "K" 3-1/2" POWER SUPPLY	LM 135216	REV. P

ITEM NO	REF DES	DESCRIPTION	VARIAN PART NO.	MFG	MFG OR MS PART NO.	QTY/DASH NO. -00	-01	-02	-03
22	A1	HIGH VOLTAGE PCB	135190-00			1			
23	A2	PWR PROCESSOR PCB	135215-00			1			
24	A3	LOGIC PCB	135018-00			1			
25									
26									
27									
28									
29	F1	FUSE, 6.25 AMP. SLOBLO	67-135462	LITTLEFUSE	L-3136.25	1			
30	B1	FAN, 16V	20-840205	PAMOTOR	8112K	1			
31	C1	CAPACITOR, 3400 uF, 200V	41-536990	SPRAGUE	36DX342F200CC2A	1			
32									
33	S1	SWITCH, INTERLOCK	71-219969	GRAYHILL	30-15	1			
34	FL1	FILTER, INPUT	43-399884	CDE	APF1050L	1			
35	T3	TRANSFORMER, FIL	C135185-00			1			
36	TB1	TERMINAL, QUICK DISC.	15-999027-01	HOL	XS09774-T	R			
37	T2	TRANSFORMER, BIAS	44-149142	SIGNAL	DL36-1	1			
38		ADAPTER, PUSH ON	15-998920	AMP	42808-2	1			
39		CABLE TIE	22-119713	PANDUIT	PRT35	2			
40		MOUNT, CABLE TIE	22-119604	PANDUIT	TA1S8	4			
41		WASHER, NYLON #4	14-999702			2			
42		SPACER, STAND-OFF	135187-00			1			

varian	MICROWAVE EQUIPMENT OPERATIONS	SERIES "K" 3-1/2" POWER SUPPLY	LM 135216	REV P

ITEM NO	REF DES	DESCRIPTION	VARIAN PART NO.	MFG	MFG OR MS PART NO.	QTY/DASH NO. -00	-01	-02	-03
43		PAN HEAD, PHIL. 6-32 x 3/8	12-222006-06			2			
44		#6 INTERNAL TOOTH WASHER	14-302006			2			
45									
46									
47		STAND-OFF	135187-01			7			
48		STAND-OFF	135187-04			3			
49									
50									
51		THERMAL COMPOUND	88-298900	WAKEFIELD	120-8	AR			
52									
53									
54									
55									
56		MAIN HARNESS ASSY	01002336-01			1			
57	K1	RELAY, POWER	72-125919	POTTER-BRUMFIELD	KUP 14A55 (120V)	1			
58									
59									
60		SUPPORT, RELAY, POWER	01000963			1			
61		STAND-OFF, HEX/FEMALE, 1/4" x 1-1/2 LG	22-431055	RAF	2120-832-A-0	2			
62		LABEL, FACTORY WIRED FOR 115 VAC	112378-39			1			
63		LABEL, DANGER	112379-03			1			

REVISIONS					
ZONE	LTR	DESCRIPTION	EO	DATE	APPROVED
	A	ADDED RF INPUT & OUTPUT INFO		5/18/81	
	B	INC E.C.O	27071	9/15/86	

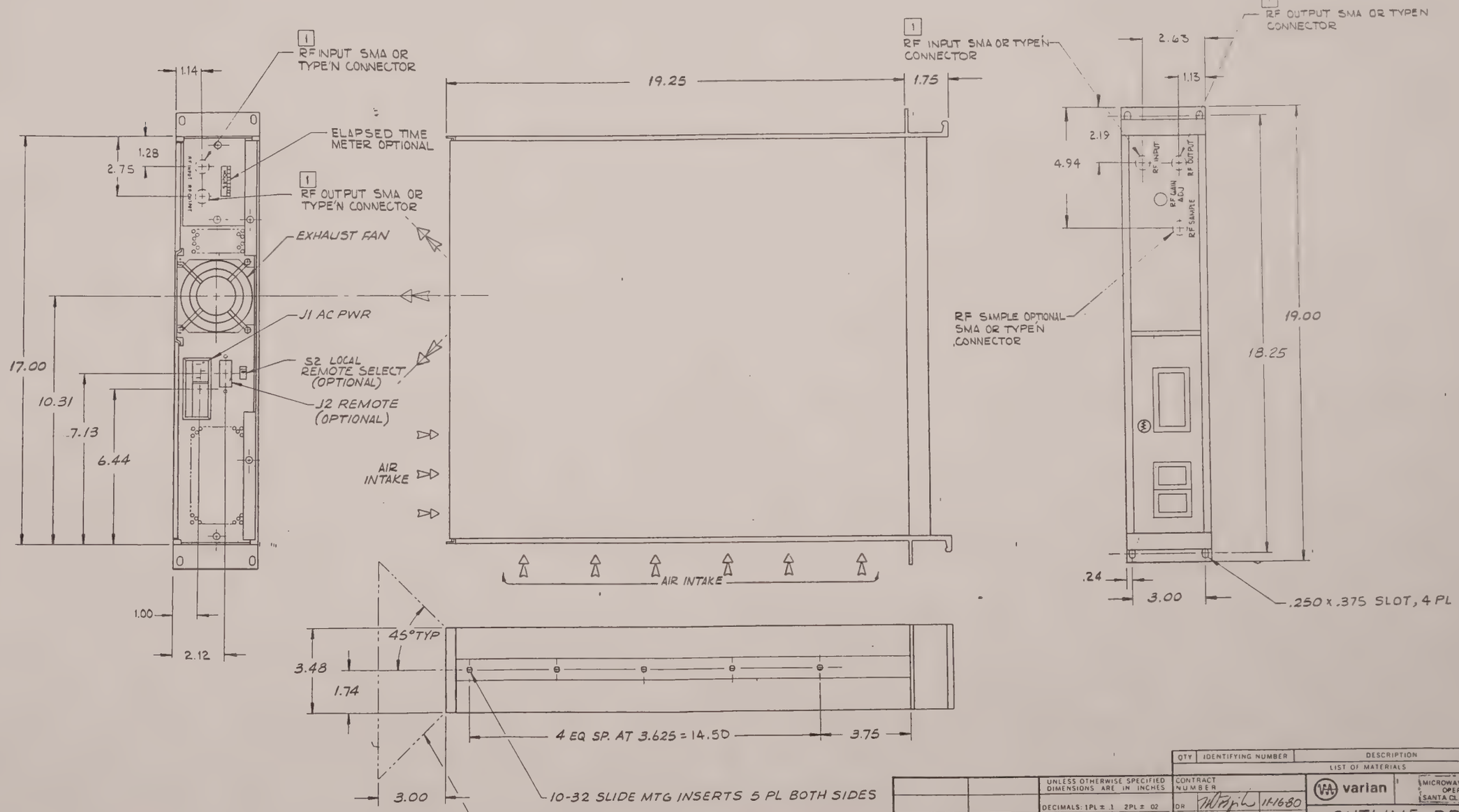

1 RF INPUT & OUTPUT IN FRONT OR REAR DETERMINE BY CUSTOMER REQUIREMENT

NOTES:

QTY	IDENTIFYING NUMBER	DESCRIPTION	CODE IDENT	ITEM
		LIST OF MATERIALS		REV

UNLESS OTHERWISE SPECIFIED DIMENSIONS ARE IN INCHES
DECIMALS: 1PL ± .1 2PL ± .02
3PL ± .010 FRAC ± 1/64
ANG ± 1° SURFACE FINISH ✓
MATERIAL

K RACK	
MULTI-USE	MULTI-USE
NEXT ASSEMBLY	USED ON
APPLICATION	

SPEC NO
FINISH

CONTRACT NUMBER 11-1680
DR 2-2-81
CHK 11-18-80
APPD
APPD 11-30-81
DESIGN ACTIVITY APPROVAL
CUSTOMER APPROVAL

varian — MICROWAVE EQUIPMENT OPERATIONS SANTA CLARA, CALIFORNIA

OUTLINE DRAWING · TWTA

SIZE	CODE IDENT NO		
D	59782	135223	B

SCALE 1/2 SHEET 1 OF 1

SUPERSEDES

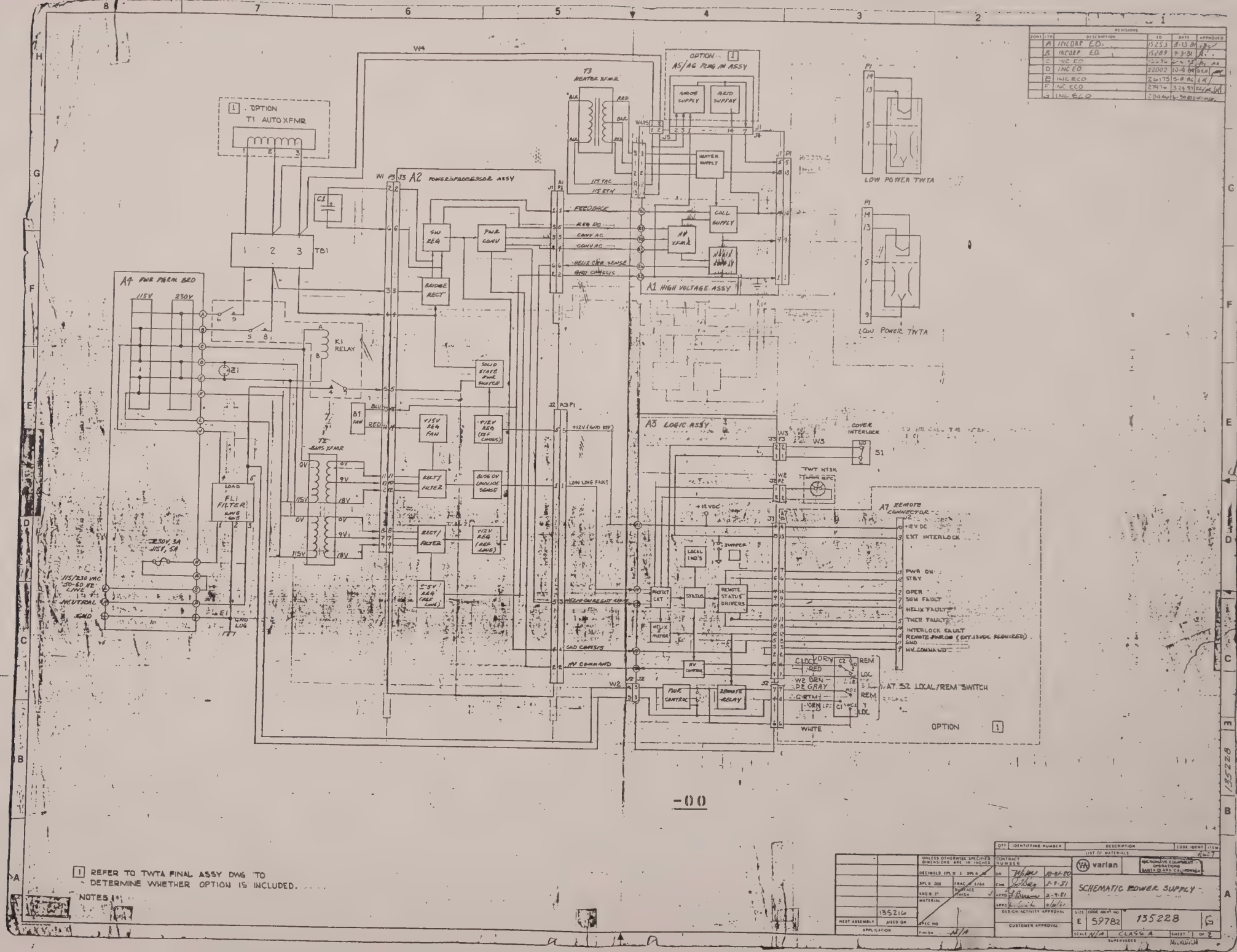
REVISIONS
ZONE LTR DESCRIPTION ECO DATE APPROVED
A INCORP E.O. 15253 8-13-80
B INCORP E.O. 15289 9-3-81
C INC ECO 15575 11-4-81
D INC ECO 22002 10-4-84
E INC ECO 26175 5-8-86
F INC ECO 27974 3-24-87
G INC ECO 29346 6-30-88
T3 HEATER XFMR
OPTION 1 A5/A6 PLUG IN ASSY
MODE SUPPLY
GRID SUPPLY
HEATER SUPPLY
COLL SUPPLY
HV XFMR
A1 HIGH VOLTAGE ASSY
P1
LOW POWER TWTA
LOW POWER TWTA
1 OPTION
T1 AUTO XFMR
TB1
A2 POWER/PROCESSOR ASSY
SW REG
PWR CONV
BRIDGE RECT
SOLID STATE RAMP SHUTDN
+15V REG FAN
+12V REG (REF CIRCUITS)
RECT/ FILTER
SURGE OV LOCKOUT SENSE
+12V REG (REF LOWS)
+5V REG (REF LOWS)
A4 PWR PERM BRD
115V
230V
K1 RELAY
Z1
B1 FAN
T2 BIAS XFMR
LOAD
FL1 FILTER
230V, 3A SLOW, 5A
115/230 VAC 50-60 HZ LINE
NEUTRAL
GND
GND LUG
E1
A3 LOGIC ASSY
+12V (GND REF)
LOW LINE FAULT
HELIX OVERCURRENT FAULT
GND CIRCUITS
HV COMMAND
LOCAL IND'S
JUMPER
PROTECT CKT
STATUS
REMOTE STATUS DRIVERS
HELIX METER
HV CONTROL
PWR CONTROL
REMOTE RELAY
COVER INTERLOCK
S1
TWT HTSK
A7 REMOTE CONNECTOR
+12V DC
EXT INTERLOCK
PWR ON STBY
OPER
SUM FAULT
HELIX FAULT
THER FAULT
INTERLOCK FAULT
REMOTE ENABLE (EXT +12VDC REQUIRED)
HV COMMAND
A7 S2 LOCAL/REM SWITCH
CLOCK
DORN
REM
LOC
W2 BRN
W2 GRY
PE GRAY
W2 ORN
W2 WHT
WHITE
OPTION 1
-00
1 REFER TO TWTA FINAL ASSY DWG TO DETERMINE WHETHER OPTION IS INCLUDED.
NOTES
varian
SCHEMATIC POWER SUPPLY
SIZE E
CODE IDENT NO 59782
135228
G
SCALE N/A
CLASS A
SHEET 1 OF 2
SUPERSEDES
135228

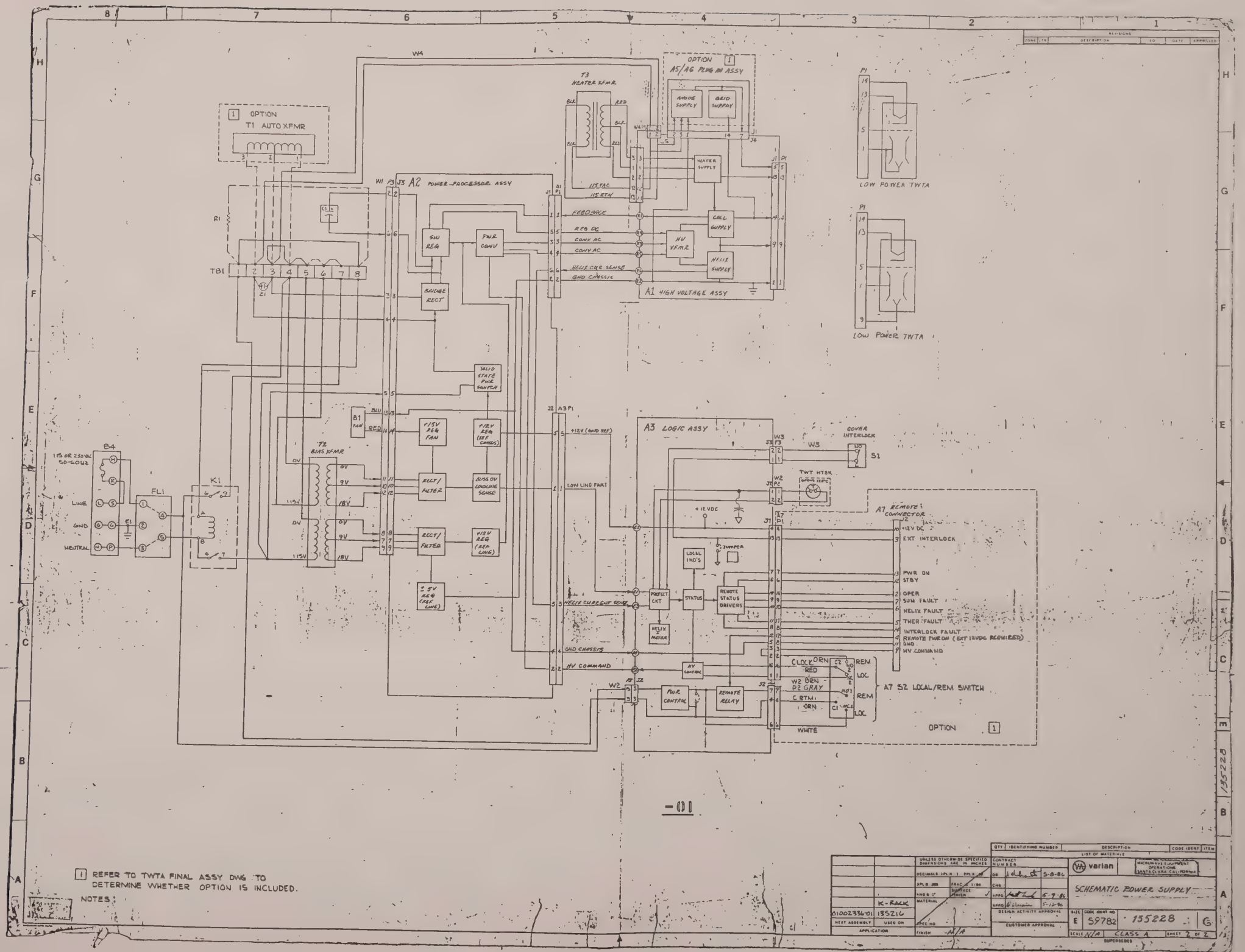

OPTION
T1 AUTO XFMR
A2 POWER PROCESSOR ASSY
T3 HEATER XFMR
OPTION
A5/A6 PLUG IN ASSY
ANODE SUPPLY
GRID SUPPLY
HEATER SUPPLY
COLL SUPPLY
HV XFMR
HELIX SUPPLY
A1 HIGH VOLTAGE ASSY
LOW POWER TWTA
LOW POWER TWTA
SW REG
PWR CONV
BRIDGE RECT
SOLID STATE PWR SWITCH
+15V REG FAN
+12V REG (REF CHASSIS)
RECT/FILTER
BUSS OV LOUDLINE SENSE
RECT/FILTER
+12V REG (REF LING)
± 5V REG (REF LING)
T2 BIAS XFMR
B1 FAN
B4
115 OR 230VAC 50-60HZ
LINE
GND
NEUTRAL
FL1
K1
TB1
A3 LOGIC ASSY
COVER INTERLOCK
S1
TWT HTSK
+12VDC
LOCAL IND'S
JUMPER
PROTECT CKT
STATUS
REMOTE STATUS DRIVERS
HELIX I METER
HV CONTROL
PWR CONTROL
REMOTE RELAY
A7 REMOTE CONNECTOR
+12V DC
EXT INTERLOCK
PWR ON
STBY
OPER
SUM FAULT
HELIX FAULT
THER FAULT
INTERLOCK FAULT
REMOTE PWR ON (EXT 12VDC REQUIRED)
GND
HV COMMAND
A7 S2 LOCAL/REM SWITCH
OPTION
-01
REFER TO TWTA FINAL ASSY DWG TO DETERMINE WHETHER OPTION IS INCLUDED.
NOTES:
K-RACK
01002336-01
135216
varian
MICROWAVE EQUIPMENT OPERATIONS SANTA CLARA CALIFORNIA
SCHEMATIC POWER SUPPLY
E
59782
135228
G
CLASS A
SHEET 2 OF 2

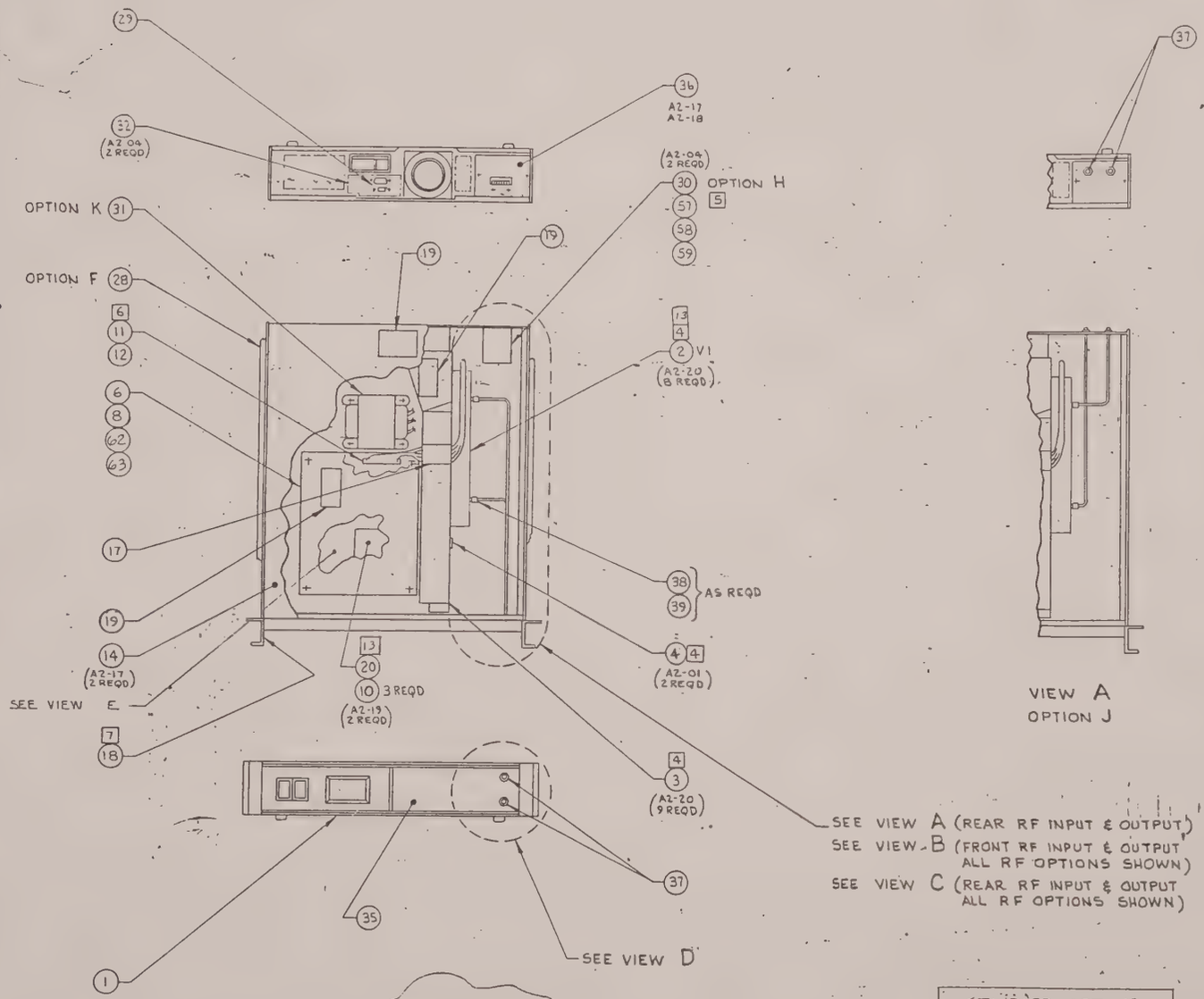

VIEW A
OPTION J

VIEW E

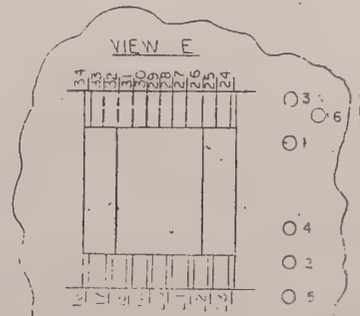

H.V. TRANSFORMER AND PCB, SOLDER CAPACITOR (P/N #1-299898) FROM 28 TO 1 AND FROM 23 TO 2. COVER LEADS WITH #18 H.V. SLEEVING (P/N 88-489806. SECURE CAPACITORS TO PCB WITH RTV.

STANDARD OPTIONS	
OPTION	DESCRIPTION
L	SSA. DRIVER
A	INPUT ISOLATOR
B	INPUT ATTENUATOR
C	HARMONIC FILTER
D	OUTPUT ISOLATOR
E	OUTPUT SAMPLE PORT
F	CHASSIS SLIDES
G	REMOTE INTERFACE
H	ELAPSED TIME METER
J	REAR RF CONNECTOR
K	230 VAC PRIME PWR

REVISIONS

ZONE	LTR	DESCRIPTION	ECO	DATE	APPROVED
	A	NC ECO	13375	3-26	KK/
	B	INC ECO	13833	5-22	JS/
	C	INC ECO	2578	10-5-81	
	D	INC ECO	2643	11-18-81	
	E	INC ECO	28472	30-87	
	F	INC ECO	3877	1-25-82	
	G	INC ECO	29107	1-7-82	

LIST OF MATERIALS CONTINUED ON SHEET 2

		REF	D135223-00	OUTLINE	45
		REF	C01001000	TWTA MODEL NUMBER BREAKDOWN	44
		1	01000420-00	SHIP KIT	43
					42
					41
D&E	1		58-180102	ADAPTER, SMA, PLUG TO PLUG	40
	AR	AR	82-299901	CABLE, SEMI-RIGID, .141	39
	AR	2	58-180100	CONNECTOR, PLUG, SMA	38
		2	58-180179	CONNECTOR, BULKHEAD JACK, TYPE N	37
H,J		1	SEE TABLE 2	PLATE, REAR	36
B,E,J		1	SEE TABLE 1	PANEL, FRONT, RIGHT	35
					34
B		1	81-831001	90° BEND W SMA CONN	33
		1 [9]	B01000133-00	COVER PLATE	32
K	1		01000443-01	230 OPTION KIT	31
H	1 [5]		76-789814	INDICATOR, ELAPSED TIME, 115V, 50HZ	30
			76-789815	INDICATOR, ELAPSED TIME, 115V, 60HZ	
G	1		C01000444-00	REMOTE CONTROL OPTION KIT	29
F	1PR		21-301120	SLIDE, ZERO "C-300-5-20	28
E	1		83-330014	DIRECTIONAL COUPLER	27
	1		58-180179	CONNECTOR, BULKHEAD JACK, TYPE N	26
D	1		A057648-02	ISOLATOR, OUTPUT	25
C	1		83-460032	HARMONIC FILTER	24
B	1		23-508002	KNOB	23
	1		83-439949	ATTENUATOR, VARIABLE	22
A	1		83-469855	ISOLATOR, INPUT	21
[13]		1	01000457	ASSY, CONNECTOR	20
		3	B112379-00	LABEL, DANGER	19
		1	A01000500	LABEL	18
		1	A01000503	CHANNEL WIRING	17
	1	AR	88-298900	THERMAL COMPOUND	16
					15
		1	C135207-00	COVER, MODIFIED	14
[11] D	1		C01000398	MOD., SIDE PANEL, RIGHT	13
		5	51-407110	CONNECTOR SOCKET MOLEX "08-50-0106	12
		1	51-411032	CONNECTOR, 14 SOC, MOLEX "09-50-3141	11
		3	C135187-02	STAND-OFF	10
[12] L	1		01008818-01	SSA DRIVER	9
		1	C135187-03	STAND-OFF	8
					7
		1	C135186-00	COVER, HIGH VOLTAGE	6
					5
		1	71-629899	SWITCH, THEMOSTATIC	4
		1	D135202-00	HEATSINK	3
[13]		1	VTS-6150B1	TWT	2
	SEE VIEW B	1	E135216-00	ASSY, POWER SUPPLY	1
[2] OPTIONS	QTY WITH OPTION	QTY ALL MODELS	IDENTIFYING NUMBER	DESCRIPTION	CODE IDENT / ITEM

LIST OF MATERIALS

NEXT ASSEMBLY	USED ON		
APPLICATION			

UNLESS OTHERWISE SPECIFIED DIMENSIONS ARE IN INCHES
DECIMALS .1PL ± .1 .2PL ± .02
3PL ± .005 FRAC ± 1/64
ANG ± 1° SURFACE FINISH ✓
MATERIAL
SPEC NO
FINISH

CONTRACT NUMBER

DR	L. Ado	6/23/81
CHK		
APPD		
APPD		
DESIGN ACTIVITY APPROVAL		
CUSTOMER APPROVAL		

varian — MICROWAVE EQUIPMENT OPERATIONS, SANTA CLARA, CALIFORNIA

TWTA FINAL ASSEMBLY VZS-6950K1 SERIES [1]

SIZE	CODE IDENT NO	
D	59782	01000376 G

SCALE — SHEET 1 OF 2

SUPERSEDES

01000376 D

NOTES:

1. IF THE LAST FOUR DIGITS OF THE MODEL NO. ARE NUMERICALLY CODED (ie VZS6950KIXXXX) THE MODEL IS NOT COVERED IN THIS DRAWING. SEE DRAWING 01000XXXX.
2. INSTALL OPTIONS ACCORDING TO TWTA MODEL NO. EXAMPLE, IF TWTA MODEL NO. IS 6950KI ACEG OPTIONS ARE A, C, E AND G. SEE RF SCHEMATIC DIAGRAM FOR ASSEMBLIES OF OPTIONS A B C D & E
3. STANDARD HARDWARE PER C110625, EXAMPLE (A2-18 2 REQD)
4. APPLY A UNIFORM, THIN COATING OF THERMAL COMPOUND ITEM 16 BETWEEN MOUNTING SURFACES OF ITEMS 2, 3 AND 4.
5. SELECT EITHER 50HZ OR 60HZ ELAPSED TIME INDICATOR ITEM 30 AS SPECIFIED ON CUSTOMER ORDER. CONNECT ITEM 30 TO TB1-3 AND TB1-2 USING ITEMS 57, 58 AND 59.
6. CONNECT TWT ITEM 2 TO CONNECTOR ITEM 11 WITH CONNECTOR SOCKETS ITEM 12 PER A01000419.
7. NAME PLATE DATA

   TWTA: (USE MODEL NO. SPECIFIED ON CUSTOMER ORDER)

   FREQ: 2.0 - 4.0 GHz

   GAIN: REFER TO K-SERIES RF PERFORMANCE SPEC. (A01000818) FOR GAIN OF EACH TWTA.
8. ———
9. IF OPTION G IS REQUIRED DELETE ITEM 32.
10. INSTALL REQUIRED OPTIONS IN THE APPROXIMATE PLACE AS SHOWN AND CONNECT RF COMPONENTS IN ORDER SHOWN ON RF SCHEMATIC DIAGRAM.
11. REPLACE SIDE PANEL, RIGHT, 112871-00 WITH ITEM 13.
12. INSTALL SSA (U1) USING #4-40 HARDWARE PER WORKMANSHIP STD B7-800299, LOCATE IN APPROXIMATE POSITION SHOWN.
    CONNECT POWER TO SSA (U1.) AS FOLLOWS -
    FROM: U1 (+12V) TO: A3TP4 WITH ITEM 59.
    FROM: U1 (GND) TO: A3TP1 WITH ITEM 55.
13. THE TWT VTS-6055A1 MAY BE SUBSTITUTED FOR THE VTS-6150B1. IF THIS SUBSTITUTION IS MADE, THE CONNECTOR ITEM 20 MUST BE REPLACED BY A GRID SUPPLY/REGULATOR 135195, QTY 1. THE H.V. TAP SETTINGS MUST BE CHANGED FROM 31 TO 1 & 33 TO 2.

FRONT PANEL TABLE 1

PART NO.	B OPTION	E OPTION	J OPTION
D01000417-12			
D01000417-15		X	
D01000417-13	X		
D01000417-17	X	X	
D01000417-00			X
D01000417-02		X	X
D01000417-03	X		X
D01000417-05	X	X	X

REAR PLATE TABLE 2

PART NO.	H OPTION	J OPTION
C01000418-00		
C01000418-01	X	
C01000418-03		X
C01000418-05	X	X

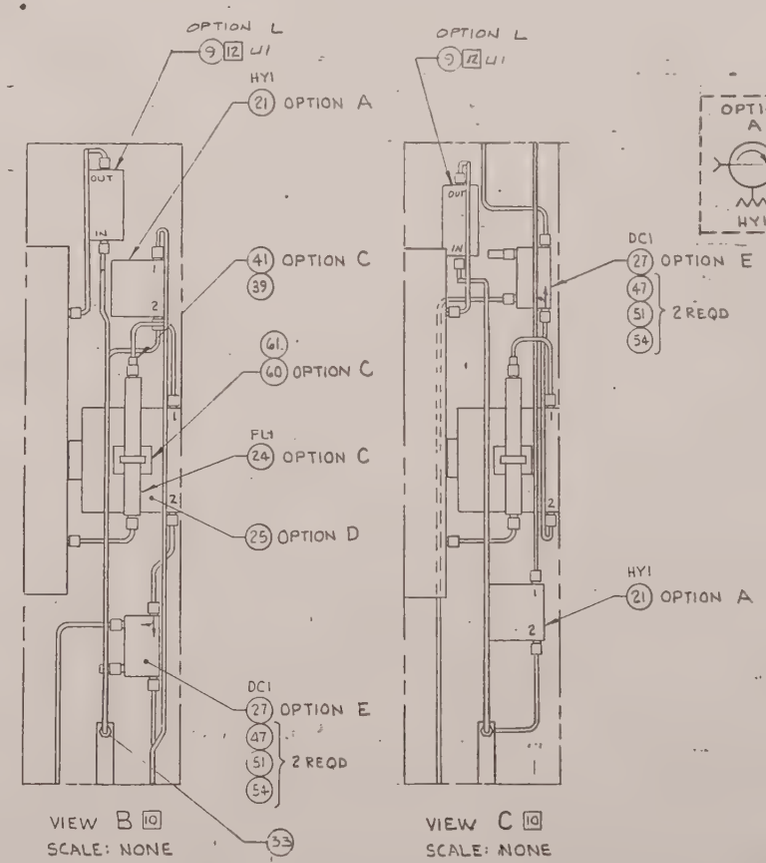

VIEW B [10]
SCALE: NONE
FRONT RF INPUT & OUTPUT
ALL RF OPTIONS SHOWN

VIEW C [10]
SCALE: NONE
REAR RF INPUT & OUTPUT
ALL RF OPTIONS SHOWN

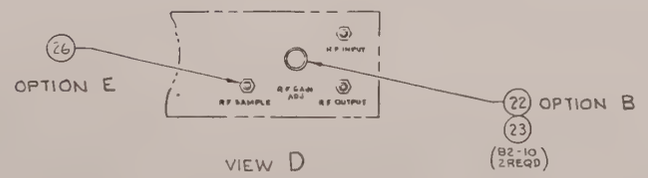

VIEW D
SCALE: NONE

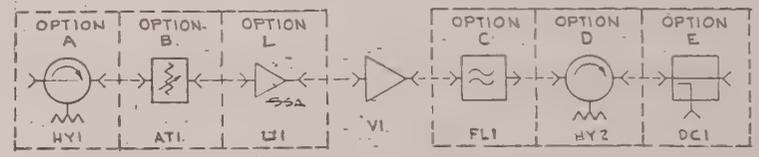

RF SCHEMATIC DIAGRAM
(ADD OPTIONS AS SPECIFIED IN ORDER SHOWN ABOVE)

ITEM	DESCRIPTION	IDENTIFYING NUMBER	QTY ALL MODELS	QTY WITH OPTION	OPTIONS [2]
67					
66					
65					
64					
63	SCREW, PAN HD, 6-32 x 7/16 LG	12-222006-07	4		
62	LOCK WASHER, INTERNAL, #6	14-301106	4		
61	CLAMP, CABLE TIE	22-119654		1	C
60	MOUNT, TIE	22-119603		1	
59	WIRE, TYPE EE, 24AWG, BLACK	81-288700		AR	H
58	SHRINK TUBING 1/8 DIA	88-488001		AR	
57	TERMINAL, QUICK DISCONNECT	15-999902		2	
56					
55					
54	WASHER, LOCK, #2	14-202002		AR	A,E,D
53					
52					
51	WASHER, FLAT, #2	14-122002		AR	A,E,D
50					
49					
48	SCREW, PAN HD, 2-56 x 5/16 LG	12-162002-05		2	D
47	SCREW, PAN HD, 2-56 x 1 1/4 LG	12-162002-22		2	E
46	SCREW, PAN HD, 2-56 x 5/16 LG	12-162002-05		2	A

LIST OF MATERIALS

REVISIONS				
ZONE	LTR	DESCRIPTION	ECO	DATE	APPROVED
		SEE SHT 1			

UNLESS OTHERWISE SPECIFIED DIMENSIONS ARE IN INCHES
DECIMALS. 1PL ± 1 2PL ± .02 3PL ± .005 FRAC ± 1/64 ANG ± 1° SURFACE FINISH
MATERIAL
CONTRACT NUMBER
DR CHK APPD APPD
DESIGN ACTIVITY APPROVAL
CUSTOMER APPROVAL

varian — MICROWAVE EQUIPMENT OPERATIONS, SANTA CLARA, CALIFORNIA

TWTA FINAL ASSEMBLY VZS-6950KI SERIES [1]

SIZE D | CODE IDENT NO 59782 | 01000376 | G
SCALE — | SHEET 2 OF 2

01000376 G

ZONE	LTR	DESCRIPTION	ECO	DATE	APPROVED
	A	INC E.O	15375	9-26-[illegible]	[illegible]
	B	INC E.O.	15550	4-16-82	[illegible]
	C	INC E.O	21555	9-10-[illegible]	[illegible]
	D	INC ECO	278-3	3-2-87	[illegible]
	E	INC. ECO	29109	1-7-88	[illegible]

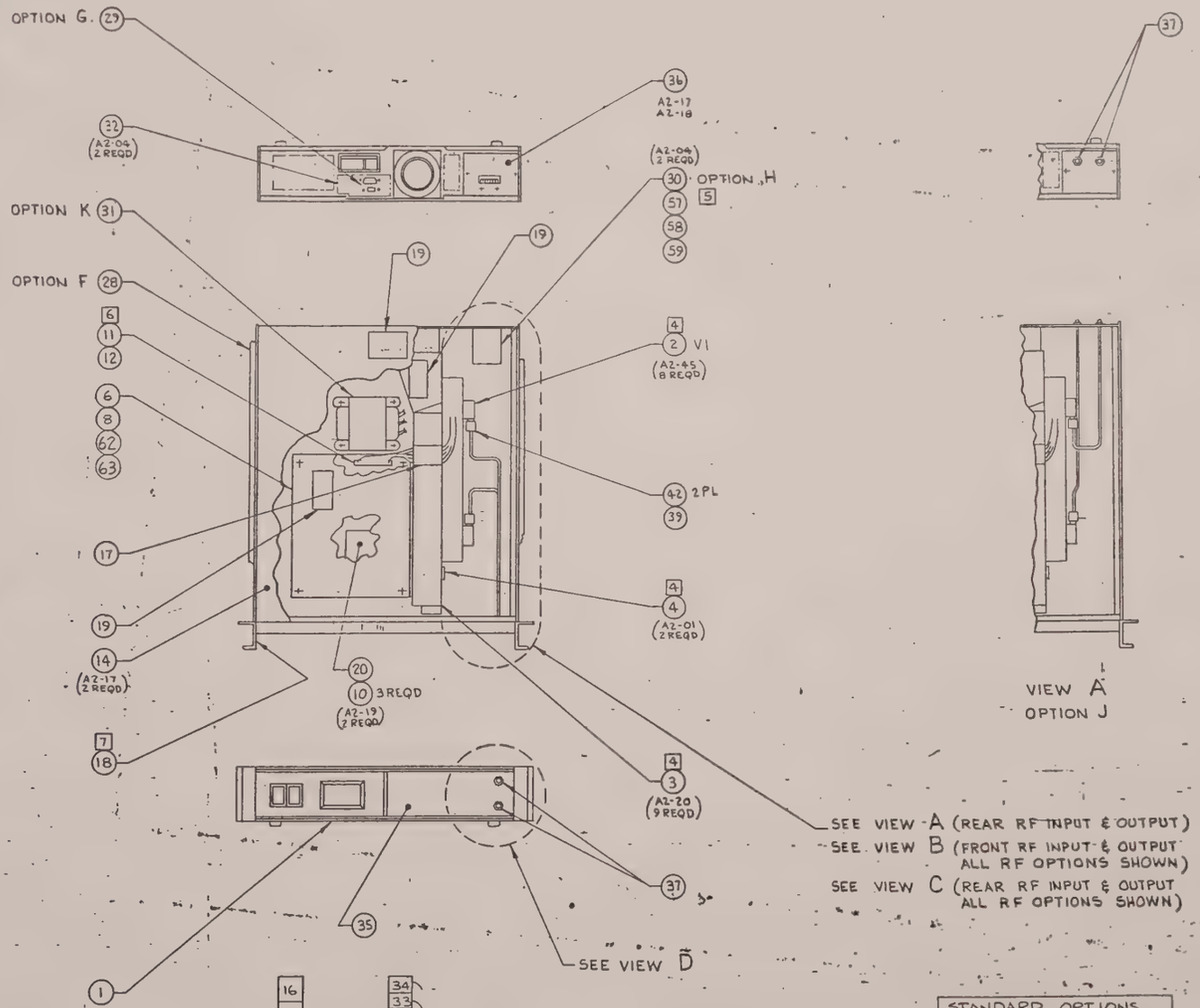

VIEW A
OPTION J

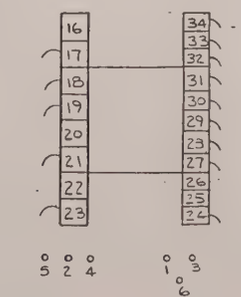

VIEW E
HV TRANSFORMER & PCB
SOLDER CAPACITOR (PN 41-299898)
FROM 1 TO 6 & FROM 2 TO 5.

STANDARD OPTIONS	
OPTION	DESCRIPTION
A	INPUT ISOLATOR
B	INPUT ATTENUATOR
C	HARMONIC FILTER
D	OUTPUT ISOLATOR
E	OUTPUT SAMPLE PORT
F	CHASSIS SLIDES
G	REMOTE INTERFACE
H	ELAPSED TIME METER
J	REAR RF CONNECTOR
K	230 VAC PRIME PWR

LIST OF MATERIALS CONTINUED ON SHEET 2

[2] OPTIONS	QTY WITH OPTION	QTY ALL MODELS	IDENTIFYING NUMBER	DESCRIPTION	CODE IDENT	ITEM
		REF	D135223-00	OUTLINE		45
		REF	C01001000	TWTA MODEL NUMBER BREAKDOWN		44
		1	D1000420-00	SHIP KIT		43
		2	58-180150	CONNECTOR, PLUG, TNC		42
						41
D&E	1		58-180102	ADAPTER, SMA, PLUG TO PLUG		40
	AR	AR	82-299901	CABLE, SEMI-RIGID, .141		39
	AR		58-180100	CONNECTOR, PLUG, SMA		38
		2	58-180179	CONNECTOR, BULKHEAD JACK, TYPE N		37
H,J		1	SEE TABLE 2	PLATE, REAR		36
B,E,J		1	SEE TABLE 1	PANEL, FRONT, RIGHT		35
						34
B		1	81-331001	90° BEND WITH SMA CONNECTOR		33
		1 [9]	B01000133-00	COVER PLATE		32
K	1		01000443-01	230 OPTION KIT		31
H	1 [5]		76-789814	INDICATOR, ELAPSED TIME, 115V, 50HZ		30
			76-789815	INDICATOR, ELAPSED TIME, 115V, 60HZ		
G	1		C01000444-00	REMOTE CONTROL OPTION KIT		29
F	1PR		21-301120	SLIDE, ZERO "C-300-5-20		28
E	1		83-330085	DIRECTIONAL COUPLER		27
	1		58-180179	CONNECTOR, BULKHEAD JACK, TYPE N		26
D	1		A057648-08	ISOLATOR, OUTPUT		25
C	1		83-460033	HARMONIC FILTER		24
B	1		23-508002	KNOB		23
	1		83-439971	ATTENUATOR, VARIABLE		22
A	1		A057648-08	ISOLATOR, INPUT		21
		1	D135199-00	ASSY, ANODE SUPPLY		20
		3	B112379-00	LABEL, DANGER		19
		1	A01000500	LABEL		18
		1	A01000503	CHANNEL WIRING		17
		AR	88-298900	THERMAL COMPOUND		16
						15
		1	C135207-00	COVER, MODIFIED		14
						13
		5	51-407110	CONNECTOR SOCKET MOLEX #08-50-0106		12
		1	51-411032	CONNECTOR, 14 SOC, MOLEX #09-50-3141		11
		3	C135187-02	STAND-OFF		10
						9
		1	C135187-03	STAND-OFF		8
						7
		1	C135186-00	COVER, HIGH VOLTAGE		6
						5
		1	71-629899	SWITCH, THERMOSTATIC		4
		1	D135202-00	HEATSINK		3
		1	[11] VTC-6116681	TWT		2
	SEE VIEW E	1	E135216-00	ASSY, POWER SUPPLY		1

LIST OF MATERIALS

NEXT ASSEMBLY	USED ON
APPLICATION	

UNLESS OTHERWISE SPECIFIED DIMENSIONS ARE IN INCHES
DECIMALS: 1PL ± .1 2PL ± .02
3PL ± .005 FRAC ± 1/64
ANG ± 1° SURFACE FINISH ✓
MATERIAL
SPEC NO.
FINISH

CONTRACT NUMBER

DR	L Ando	6/22/81
CHK	[illegible]	6/25/81
APPD	[illegible]	6/29/81
APPD	[illegible]	[illegible]

DESIGN ACTIVITY APPROVAL
CUSTOMER APPROVAL

varian — MICROWAVE EQUIPMENT OPERATIONS, SANTA CLARA, CALIFORNIA

TWTA FINAL ASSEMBLY VZH-6970KI SERIES [1]

SIZE	CODE IDENT NO.		
D	59782	01000377	E

SCALE — CLASS A SHEET 1 OF 2

SUPERSEDES

01000377 D

NOTES:

1. IF THE LAST FOUR DIGITS OF THE MODEL NO. ARE NUMERICALLY CODED (ie 6970K1XXXX) THE MODEL IS NOT COVERED IN THIS DRAWING. SEE DRAWING 01000XXX.
2. INSTALL OPTIONS ACCORDING TO TWTA MODEL NO. EXAMPLE, IF TWTA MODEL NO. IS 6970K1ACEG OPTIONS ARE A, C, E AND G. SEE RF SCHEMATIC DIAGRAM FOR ASSEMBLIES OF OPTIONS A B C D & E
3. STANDARD HARDWARE PER C110625, EXAMPLE (A2-18 2 REQD)
4. APPLY A UNIFORM THIN COATING OF THERMAL COMPOUND ITEM 16 BETWEEN MOUNTING SURFACES OF ITEMS 2, 3 AND 4.
5. SELECT EITHER 50HZ OR 60HZ ELAPSED TIME INDICATOR ITEM 30 AS SPECIFIED ON CUSTOMER ORDER. CONNECT ITEM 30 TO TB1-3 AND TB1-2 USING ITEMS 57, 58 AND 59.
6. CONNECT TWT ITEM 2 TO CONNECTOR ITEM 11 WITH CONNECTOR SOCKETS ITEM 12 PER A01000419.
7. NAME PLATE DATA

   TWTA: (USE MODEL NO. SPECIFIED ON CUSTOMER ORDER)

   FREQ: 4.0 – 10.0 GHz

   GAIN: REFER TO K-SERIES RF PERFORMANCE SPEC. (A01000818) FOR GAIN OF EACH TWTA.
8. ———
9. IF OPTION G IS REQUIRED DELETE ITEM 32.
10. INSTALL REQUIRED OPTIONS IN THE APPROXIMATE PLACE AS SHOWN AND CONNECT RF COMPONENTS IN ORDER SHOWN ON RF SCHEMATIC DIAGRAM.

    INSTALL SSA (U1) USING #4-40 HARDWARE PER WORKMANSHIP STD 87-800299, LOCATE IN APPROXIMATE POSITION SHOWN.
    CONNECT POWER TO SSA (U1) AS FOLLOWS -
    FROM: U1 (+12V) TO: A3TP4 WITH ITEM 59.
    FROM: U1 (GND) TO: A3TP1 WITH ITEM 55.
11. THE VTH-6079H1 MAY BE SUBSTITUTED FOR THE VTC-6166B1.

FRONT PANEL TABLE 1

PART NO.	B OPTION	E OPTION	J OPTION
D01000417-12			
D01000417-15		X	
D01000417-13	X		
D01000417-17	X	X	
D01000417-00			X
D01000417-02		X	X
D01000417-03	X		X
D01000417-05	X	X	X

REAR PLATE TABLE 2

PART NO.	H OPTION	J OPTION
C01000418-00		
C01000418-01	X	
C01000418-03		X
C01000418-05	X	X

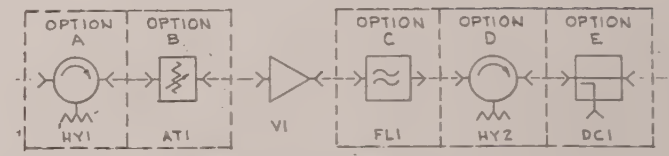

RF SCHEMATIC DIAGRAM
(ADD OPTIONS AS SPECIFIED IN ORDER SHOWN ABOVE)

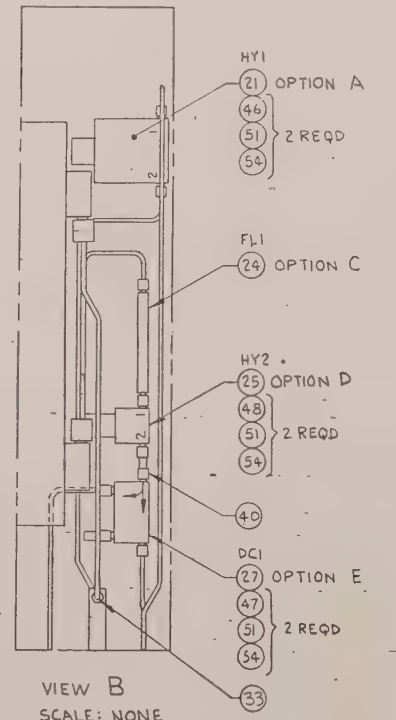

VIEW B
SCALE: NONE
FRONT RF INPUT & OUTPUT
ALL RF OPTIONS SHOWN

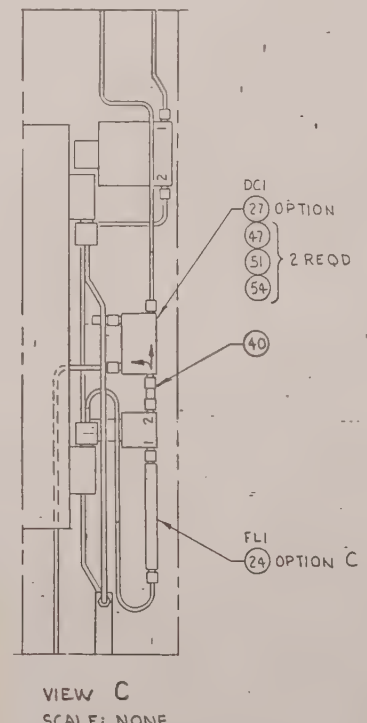

VIEW C
SCALE: NONE
REAR RF INPUT & OUTPUT
ALL RF OPTIONS SHOWN

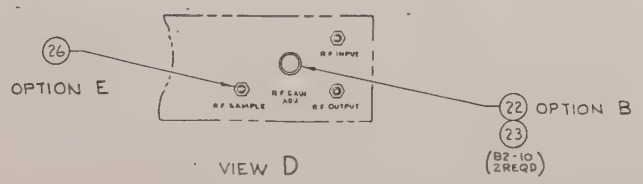

VIEW D
SCALE: NONE

ITEM	CODE IDENT	DESCRIPTION	IDENTIFYING NUMBER	QTY ALL MODELS	QTY WITH OPTION	OPTIONS
67						
66						
65						
64						
63		SCREW, PAN HD, 6-32 x 7/16 LG	12-222 006-07	4		
62		LOCK WASHER, INTERNAL, #6	14-301 106	4		
61						
60						
59		WIRE, TYPE EE, 24 AWG, BLACK	B1-288700	-	AR	H
58		SHRINK TUBING 1/8 DIA	B8-488001		AR	H
57		TERMINAL, QUICK DISCONNECT	15-999902		2	H
56						
55						
54		WASHER, LOCK, #2	14-202002		AR	A,E,D
53						
52						
51		WASHER, FLAT, #2	14-122002		AR	A,E,D
50						
49						
48		SCREW, PAN HD, 2-56 x 5/16 LG	12-162002-05		2	D
47		SCREW, PAN HD, 2-56 x 1 1/4 LG	12-162002-22		2	E
46		SCREW, PAN HD, 2-56 x 5/16 LG	12-162002-05		2	A
		DESCRIPTION	IDENTIFYING NUMBER	QTY ALL MODELS	QTY WITH OPTION	2 OPTIONS

LIST OF MATERIALS P656

UNLESS OTHERWISE SPECIFIED DIMENSIONS ARE IN INCHES
DECIMALS: 1PL ± .1 2PL ± .02
3PL ± .005 FRAC ± 1/64
ANG ± 1° SURFACE FINISH ✓
MATERIAL
SPEC NO
FINISH

CONTRACT NUMBER
DR
CHK
APPD
APPD
DESIGN ACTIVITY APPROVAL
CUSTOMER APPROVAL

varian
MICROWAVE EQUIPMENT OPERATIONS
SANTA CLARA, CALIFORNIA

TWTA FINAL ASSEMBLY VZH-6970K1 SERIES [1]

SIZE D | CODE IDENT NO 59782 | 01000377 | E
SCALE — | CLASS A | SHEET 2 OF 2

SUPERSEDES

01000377

REVISIONS					
PRF	LTR	DESCRIPTION	ECO	DATE	APPROVED
	A	INC. E.O.	15371	9-2881	VK
	B	INC E.O.	15889	4-16-82	JS
	C	INC EO	16884	7/30/82	AE
	D	INC E.O.	21555	8 10 84	D KH
	E	INC. E.C.O.	27843	2-27-87	LB/
	F	INC E.C.O.	28039	4-10-87	
	G	INC ECO	28317	6-5-87	
	H	INC ECO	28776	4 14 87	

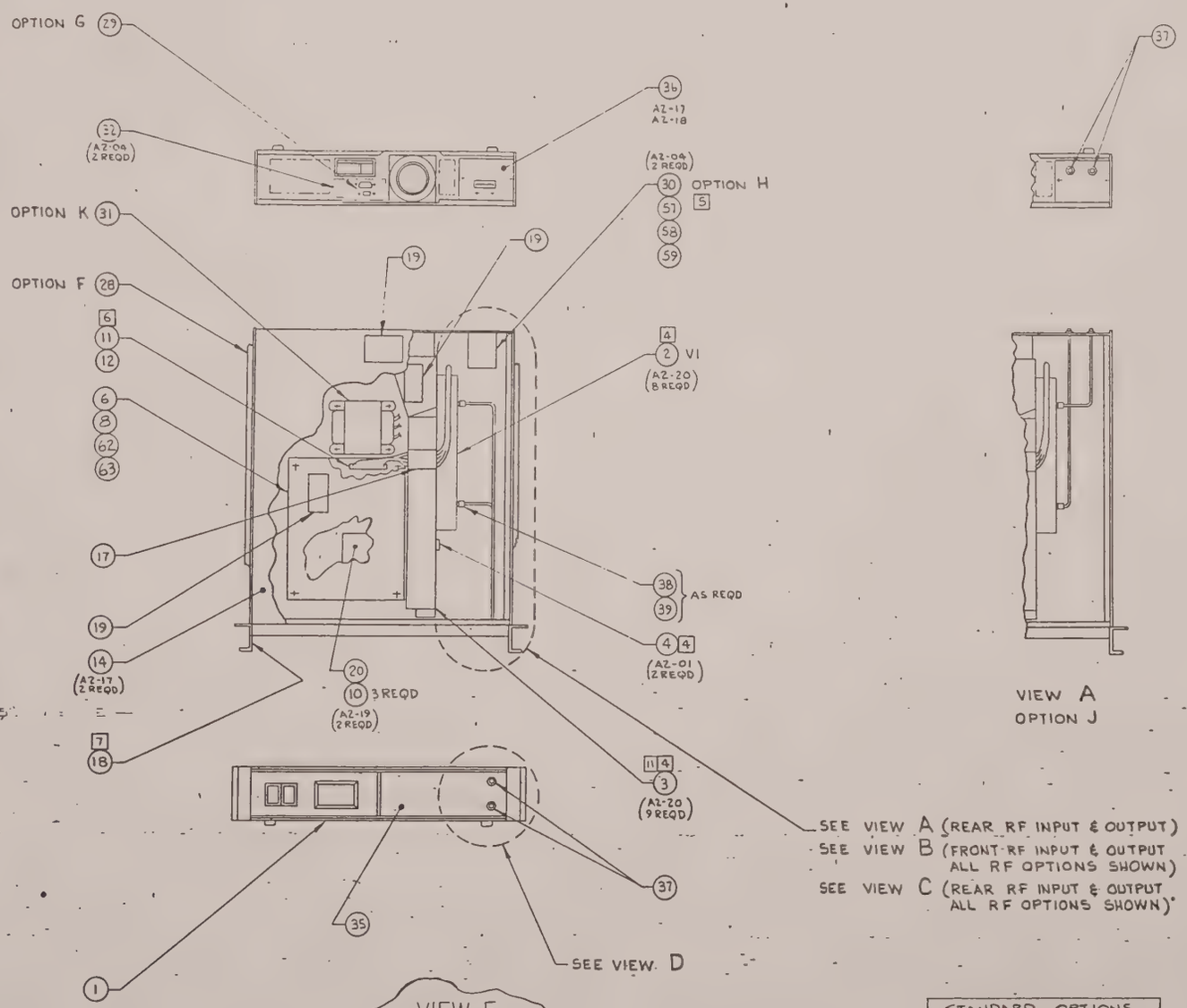

VIEW A
OPTION J

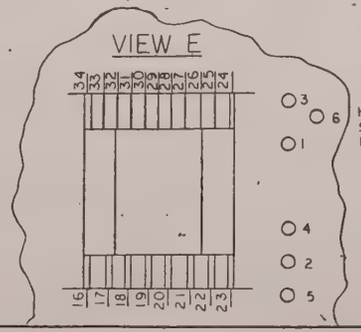

H.V. TRANSFORMER AND PCB, SOLDER CAPACITOR (P/N 41-299898)* FROM 1 TO 6 AND FROM 2 TO 5.

STANDARD OPTIONS	
OPTION	DESCRIPTION
L	SSA DRIVER
A	INPUT ISOLATOR
B	INPUT ATTENUATOR
C	HARMONIC FILTER
D	OUTPUT ISOLATOR
E	OUTPUT SAMPLE PORT
F	CHASSIS SLIDES
G	REMOTE INTERFACE
H	ELAPSED TIME METER
J	REAR RF CONNECTOR
K	230 VAC PRIME PWR

LIST OF MATERIALS CONTINUED ON SHEET 2

OPTIONS	QTY WITH OPTION	QTY ALL MODELS	IDENTIFYING NUMBER	DESCRIPTION	CODE IDENT	ITEM
		REF	D135223-00	OUTLINE		45
		REF	C01001000	TWTA MODEL NUMBER BREAKDOWN		44
		1	01000420-00	SHIP KIT		43
						42
						41
D&E	1		58-180102	ADAPTER, SMA, PLUG TO PLUG		40
	AR	AR	82-299901	CABLE, SEMI-RIGID, .141		39
	AR	2	58-180150	CONNECTOR, TNC		38
		2	58-180179	CONNECTOR, BULKHEAD JACK, TYPE N		37
H,J		1	SEE TABLE 2	PLATE, REAR		36
B,E,J		1	SEE TABLE 1	PANEL, FRONT, RIGHT		35
						34
B			81-831001	90° BEND W SMA CONN.		33
		1 [9]	B01000133-00	COVER PLATE		32
K	1		01000443-01	230, OPTION KIT		31
H	1 [5]		76-789814	INDICATOR, ELAPSED TIME, 115V, 50HZ		30
			76-789815	INDICATOR, ELAPSED TIME, 115V, 60HZ		
G	1		C01000444-00	REMOTE CONTROL OPTION KIT		29
F	1PR		21-301120	SLIDE, ZERO #C-300-5-20		28
E	1		83-330015	DIRECTIONAL COUPLER		27
	1		58-180179	CONNECTOR, BULKHEAD JACK, TYPE N		26
D	1		A057648-07	ISOLATOR, OUTPUT		25
C	1		83-460013	HARMONIC FILTER		24
B	1		23-508002	KNOB		23
	1		83-439945	ATTENUATOR, VARIABLE		22
A	1		83-469857	ISOLATOR, INPUT		21
		1	D135195-00	ASSY, GRID SUPPLY / REGULATOR		20
		3	B112379-00	LABEL, DANGER		19
		1	A01000500	LABEL		18
			A01000503	CHANNEL WIRING		17
	-	AR	88-298900	THERMAL COMPOUND		16
						15
		1	C135207-00	COVER, MODIFIED		14
						13
		5	51-407110	CONNECTOR SOCKET MOLEX #08-50-0106		12
		1	51-411032	CONNECTOR, 14 SOC, MOLEX #09-50-3141		11
		3	C139187-02	STAND-OFF		10
L [12]	1		01000818-03	SSA1 DRIVER		9
		1	C135187-03	STAND-OFF		8
		1	135225-01	HEAT SPREADER		7
		1	C135186-00	COVER, HIGH VOLTAGE		6
	-	1	135225-00	HEAT SPREADER		5
		1	71-629899	SWITCH, THERMOSTATIC		4
		1	D135202-00	HEATSINK		3
[11]		1	VTX-6089H3	TWT		2
	SEE VIEW E	1	E135216-00	ASSY, POWER SUPPLY		1

LIST OF MATERIALS P656

NEXT ASSEMBLY	USED ON
APPLICATION	

UNLESS OTHERWISE SPECIFIED DIMENSIONS ARE IN INCHES
DECIMALS: 1PL ± .1 2PL ± .02
3PL ± .005 FRAC ± 1/64
ANG ± 1° SURFACE FINISH ✓
MATERIAL
SPEC NO
FINISH

CONTRACT NUMBER
DR L. Ado 6/19/81
CHK K. Uhl 6/25/81
APPD [illegible] 7/1/81
APPD [illegible] 7/1/81
DESIGN ACTIVITY APPROVAL
CUSTOMER APPROVAL

varian
MICROWAVE EQUIPMENT OPERATIONS
SANTA CLARA, CALIFORNIA

TWTA FINAL ASSEMBLY VZX-6980K2 SERIES [1]

SIZE	CODE IDENT NO		
D	59782	01000378	H

SCALE — SHEET 1 OF 2

SUPERSEDES

01000378 D

REVISIONS				
ZONE LTR	DESCRIPTION	ECO	DATE	APPROVED
	SEE SHEET 1			

NOTES:

1. IF THE LAST FOUR DIGITS OF THE MODEL NO. ARE NUMERICALLY CODED (ie 6980K2XXXX) MODEL IS NOT COVERED IN THIS DRAWING. SEE DRAWING 01000XXX.
2. INSTALL OPTIONS ACCORDING TO TWTA MODEL NO. EXAMPLE, IF TWTA MODEL NO. IS 6980K2ACEG OPTIONS ARE A, C, E AND G SEE RF SCHEMATIC DIAGRAM FOR ASSEMBLIES OF OPTIONS A B C D & E
3. STANDARD HARDWARE PER C110625, EXAMPLE (A2-18 2 REQD)
4. APPLY A UNIFORM THIN COATING OF THERMAL COMPOUND ITEM 16 BETWEEN MOUNTING SURFACES OF ITEMS 2, 3 AND 4.
5. SELECT EITHER 50HZ OR 60HZ ELAPSED TIME INDICATOR ITEM 30 AS SPECIFIED ON CUSTOMER ORDER. CONNECT ITEM 30 TO TB1-3 AND TB1-2 USING ITEMS 57, 58 AND 59.
6. CONNECT TWT ITEM 2 TO CONNECTOR ITEM 11 WITH CONNECTOR SOCKETS ITEM 12 PER A01000419.
7. NAME PLATE DATA
   TWTA: (USE MODEL NO. SPECIFIED ON CUSTOMER ORDER)
   FREQ: 8.0 - 12.4 GHz
   GAIN: REFER TO K-SERIES RF PERFORMANCE SPEC. (A 01000818) FOR GAIN OF EACH TWTA.
8. ———
9. IF OPTION G IS REQUIRED DELETE ITEM 32.
10. INSTALL REQUIRED OPTIONS IN THE APPROXIMATE PLACE AS SHOWN AND CONNECT RF COMPONENTS IN ORDER SHOWN ON RF SCHEMATIC DIAGRAM.
11. THE VTU-6195C2 MAY BE SUBSTITUTED FOR THE VTX-6089H3. THE VTU-6195C2 MUST BE GIVEN AN ADDITIONAL LABEL STATING "REPLACEMENT TUBE IS VTX-6089H3".
12. INSTALL SSA (U1) USING #4-40 HARDWARE PER WORKMANSHIP STD 87-800299, LOCATE IN APPROXIMATE POSITION SHOWN.
    CONNECT POWER TO SSA (U1) AS FOLLOWS -
    FROM: U1 (+12V) TO: A3TP4 WITH ITEM 59.
    FROM: U1 (GND) TO: A3TP1 WITH ITEM 55.

FRONT PANEL TABLE 1			
PART NO.	B OPTION	E OPTION	J OPTION
D01000417-12			
D01000417-15		X	
D01000417-13	X		
D01000417-17	X	X	
D01000417-00			X
D01000417-02		X	X
D01000417-03	X		X
D01000417-05	X	X	X

REAR PLATE TABLE 2		
PART NO.	H OPTION	J OPTION
C01000418-00		
C01000418-01	X	
C01000418-03		X
C01000418-05	X	X

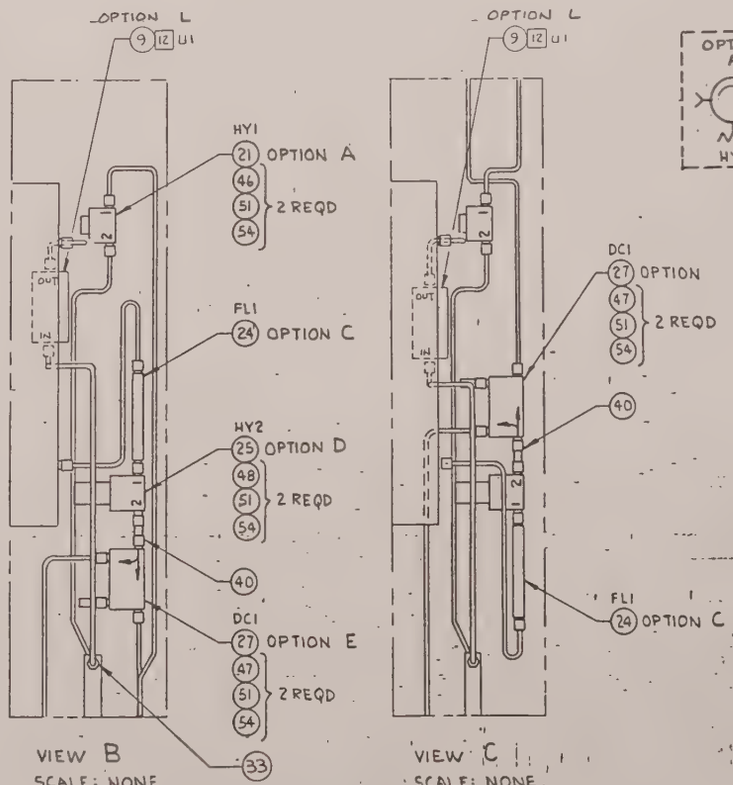

VIEW B
SCALE: NONE
FRONT RF INPUT & OUTPUT
ALL RF OPTIONS SHOWN

VIEW C
SCALE: NONE
REAR RF INPUT & OUTPUT
ALL RF OPTIONS SHOWN

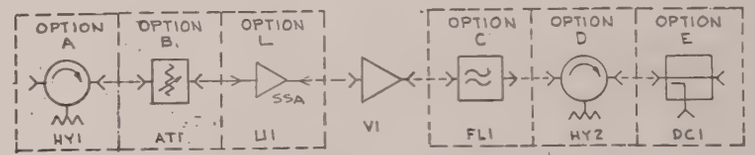

RF SCHEMATIC DIAGRAM
(ADD OPTIONS AS SPECIFIED IN ORDER SHOWN ABOVE)

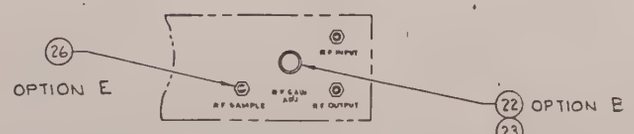

VIEW D
SCALE: NONE

ITEM	CODE IDENT	DESCRIPTION	IDENTIFYING NUMBER	QTY ALL MODELS	QTY WITH OPTION	OPTIONS
		LIST OF MATERIALS				
67						
66						
65						
64						
63		SCREW, PAN HD, 6-32 x 3/16 LG.	12-222 006-07	4		
62		LOCK WASHER, INTERNAL, #6	14-301 106 -	4		
61						
60						
59		WIRE, TYPE EG, 24AWG, BLACK	81-2B8700		AR	H
58		SHRINK TUBING 1/8 DIA	88-488001		AR	H
57		TERMINAL, QUICK DISCONNECT	15-999902		2	H
56						
55						
54		WASHER, LOCK, #2	14-202002		AR	A,E,D
53		HEX NUT 6-32	13-102006	4		
52		WASHER, LOCK #6	14-202006	4		
51		WASHER, FLAT, #2	14-122002		AR	A,E,D
50		WASHER, FLAT #6	14-122006	4		
49		SCREW, PAN HD, 6-32 x 1 3/4 LG	12-222006-26	4		
48		SCREW, PAN HD, 2-56 x 5/16 LG	12-162002-05		2	D
47		SCREW, PAN HD, 2-56 x 1 1/4 LG	12-162002-22		2	E
46		SCREW, PAN HD, 2-56 x 5/16 LG	12-162002-05		2	A

P656

UNLESS OTHERWISE SPECIFIED DIMENSIONS ARE IN INCHES	CONTRACT NUMBER	varian	MICROWAVE EQUIPMENT OPERATIONS SANTA CLARA, CALIFORNIA
DECIMALS: 1PL ± .1 2PL ± .02 3PL ± .005 FRAC ± 1/64 ANG ± 1° SURFACE FINISH ✓ MATERIAL SPEC NO FINISH	DR CHK APPD APPD DESIGN ACTIVITY APPROVAL CUSTOMER APPROVAL	TWTA FINAL ASSEMBLY VZX-6980K2 SERIES 1	
		SIZE D	CODE IDENT NO 59782
		01000378	H
		SCALE —	SHEET 2 OF 2
		SUPERSEDES	

01000378 D

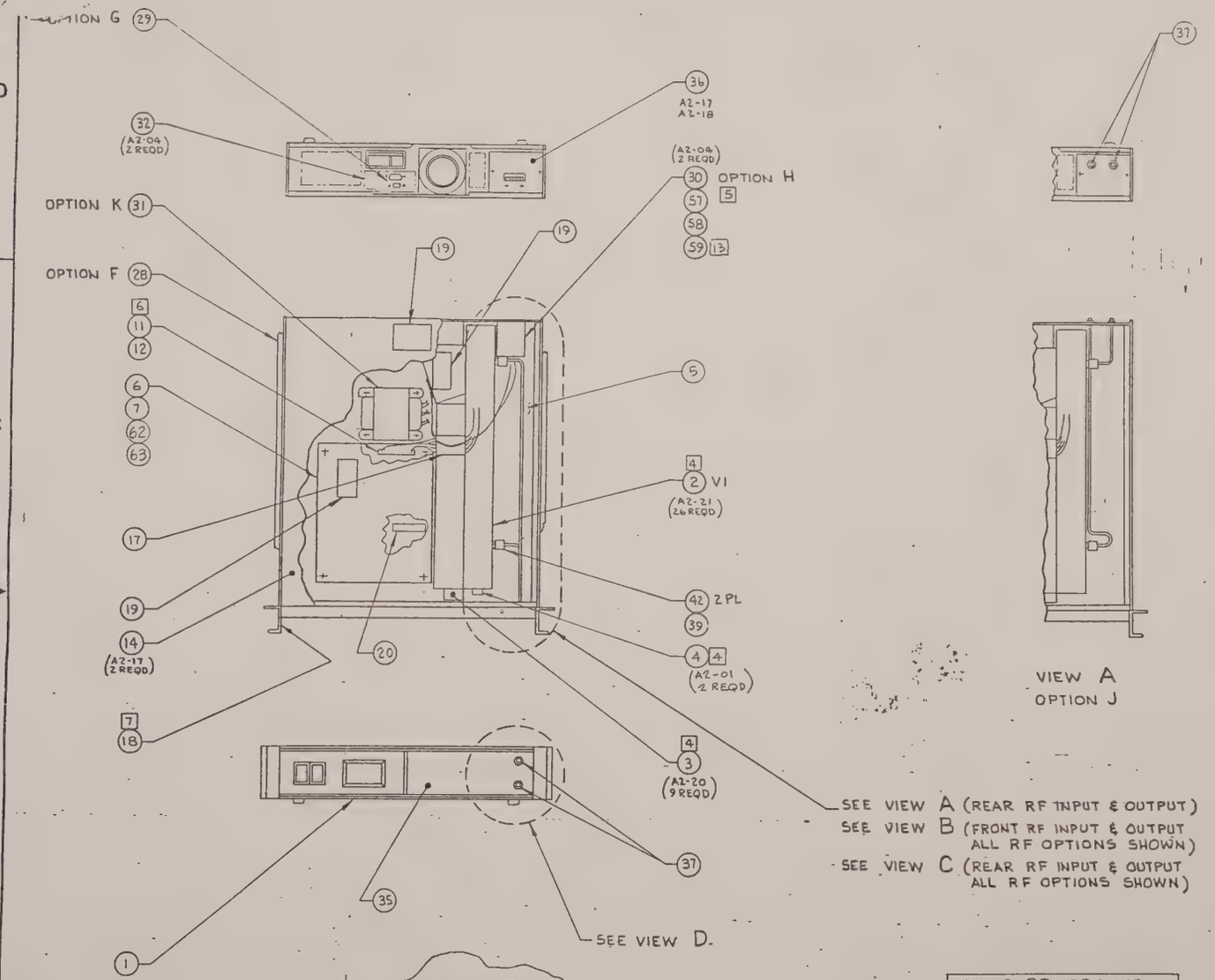

VIEW A
OPTION J

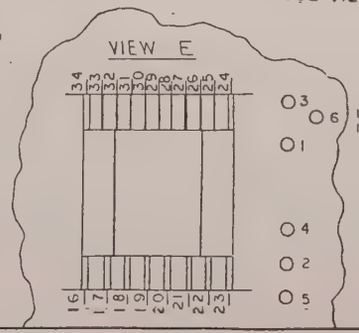

STANDARD OPTIONS	
OPTION	DESCRIPTION
L	SSA DRIVER
A	INPUT ISOLATOR
B	INPUT ATTENUATOR
C	HARMONIC FILTER
D	OUTPUT ISOLATOR
E	OUTPUT SAMPLE PORT
F	CHASSIS SLIDES
G	REMOTE INTERFACE
H	ELAPSED TIME METER
J	REAR RF CONNECTOR
K	230 VAC PRIME PWR

NEXT ASSEMBLY	USED ON
APPLICATION	

ITEM	QTY	DESCRIPTION	ID	DATE	APPROVED
	A	INC E.C.O.	15373	11-22-83	
	B	INC E.C.O.	[illegible]	[illegible]	
	C	INC ECO	[illegible]	[illegible]	
	D	INC. E.C.O.	15373	11-22-83	
	E	INC ECO	21570	9-2-86	
	F	INC ECO	22127	11-01-84	
	G	INC E.C.O.	23-3-87		
	H	INC ECO	26776	9-9-87	
	J	INC ECO	28777	8-9-87	
	K	INC ECO	29381	9-14-87	
	L	INC ECO	31327	1-27-88	

LIST OF MATERIALS CONTINUED ON SHEET 2

		QTY WITH OPTION	QTY ALL MODELS	IDENTIFYING NUMBER	DESCRIPTION	CODE IDENT	ITEM
			REF	D135223-00	OUTLINE		45
			REF	C01001C00	TWTA MODEL NUMBER BREAKDOWN		44
			1	D1000420-00	SHIP KIT		43
			2	58-180-50	CONNECTOR, PLUG, TNC		42
C		AR		58-180117	CONNECTOR, JACK, SMA		41
D&E		1		58-180102	ADAPTER, SMA, PLUG TO PLUG		40
		AR	AR	82-299901	CABLE, SEMI-RIGID, .141		39
		AR		58-180100	CONNECTOR, PLUG, SMA		38
			2	58-180179	CONNECTOR, BULKHEAD JACK, TYPE N		37
H,J			1	SEE TABLE 2	PLATE, REAR		36
B,E,J			1	SEE TABLE 1	PANEL, FRONT, RIGHT		35
B			2	61-531001	90° BEND W SMA, .141 CABLE		34
D		1		83-450057	TERMINATION		33
			1 [9]	B01000133-00	COVER PLATE		32
K		1		D1000443-01	230 OPTION KIT		31
H		1 [5]		76-789814	INDICATOR, ELAPSED TIME, 115V, 50Hz		30
				76-789815	INDICATOR, ELAPSED TIME, 115V, 60Hz		
G		1		C01000444-00	REMOTE CONTROL OPTION KIT		29
F		1PR		21-301120	SLIDE, ZERO #C-300-5-20		28
E		1		83-330013	DIRECTIONAL COUPLER		27
		1		58-180179	CONNECTOR, BULKHEAD JACK, TYPE N		26
D		1		83-450700	CIRCULATOR		25
C		1		83-460031	HARMONIC FILTER		24
B		1		23-508002	KNOB		23
		1		83-439948	ATTENUATOR, VARIABLE		22
A		1		83-469812	ISOLATOR, INPUT		21
			1	A01000457-00	ASSY, CONNECTOR		20
			3	B112379-00	LABEL, DANGER		19
			1	A01000530	LABEL		18
			1	A01000503	CHANNEL WIRING		17
			AR	88-298900	THERMAL COMPOUND		16
							15
			1	C135207-00	COVER, MODIFIED		14
[11]	D		1	C01000398	MOD., SIDE PANEL, RIGHT		13
			6	51-407110	CONNECTOR SOCKET MOLEX #08-50-0106		12
			4	51-411032	CONNECTOR, 14 SOC, MOLEX #09-50-3141		11
							10
[12]	L		1		01000818-00	SSA DRIVER		9
							8
			1	C135187-04	STAND-OFF		7
			1	C135186-00	COVER, HIGH VOLTAGE		6
			1	01000495	BASE PLATE MOD.		5
			1	71-629812	SWITCH, THERMOSTATIC		4
			1	D135202	HEATSINK		3
			1	VTL-6140B1	TWT		2
SEE VIEW E | | SEE VIEW E | 1 | E135216-00 | ASSY, POWER SUPPLY | | 1 |

[2] OPTIONS

LIST OF MATERIALS

UNLESS OTHERWISE SPECIFIED DIMENSIONS ARE IN INCHES
DECIMALS: 1PL ± 1 2PL ± 02
3PL ± .005 FRAC ± 1/64
ANG ± 1° SURFACE FINISH ✓
MATERIAL
SPEC NO
FINISH

CONTRACT NUMBER

DR	L Ando	6/19/81
CHK	B. Cie	6/25/81
APPD	John Cairo	7/1/81
APPD	P Bate	7/13/81

DESIGN ACTIVITY APPROVAL
CUSTOMER APPROVAL

varian
MICROWAVE EQUIPMENT DIVISION
SANTA CLARA, CALIFORNIA

TWTA FINAL ASSEMBLY

VZL-6940K1 & VZL6941K1 SERIES [1]

SIZE	CODE IDENT NO		
D	59782	01000379	L

SCALE — | SHEET 1 OF 2

SUPERSEDES

01000379

NOTES:

1. IF THE LAST FOUR DIGITS OF THE MODEL NO. ARE NUMERICALLY CODED (ie 6941K1XXXX) MODEL IS NOT COVERED IN THIS DRAWING. SEE DRAWING 0100XXXX.
2. INSTALL OPTIONS ACCORDING TO TWTA MODEL NO. EXAMPLE, IF TWTA MODEL NO. IS 6941K1ACEG OPTIONS ARE A, C, E AND G. SEE RF SCHEMATIC DIAGRAM FOR ASSEMBLIES OF OPTIONS A B C D & E
3. STANDARD HARDWARE PER C110625, EXAMPLE (A7-18 2 REQD)
4. APPLY A UNIFORM THIN COATING OF THERMAL COMPOUND ITEM 16 BETWEEN MOUNTING SURFACES OF ITEMS 2, 3 AND 4
5. SELECT EITHER 50HZ OR 60HZ ELAPSED TIME INDICATOR ITEM 30 AS SPECIFIED ON CUSTOMER ORDER. CONNECT ITEM 30 TO TB1-3 AND TB1-2 USING ITEMS 57, 58 AND 59.
6. CONNECT TWT ITEM 2 TO CONNECTOR ITEM 11 WITH CONNECTOR SOCKETS ITEM 12 PER A01000419.
7. NAME PLATE DATA
   TWTA: (USE MODEL NO. SPECIFIED ON CUSTOMER ORDER)
   FREQ: 1.0-2.0 GHz
   GAIN: REFER TO K-SERIES RF PERFORMANCE SPEC. (A01000818) FOR GAIN OF EACH TWTA.
8. ———
9. IF OPTION G IS REQUIRED DELETE ITEM 32.
10. INSTALL REQUIRED OPTIONS IN THE APPROXIMATE PLACE AS SHOWN AND CONNECT RF COMPONENTS IN ORDER SHOWN ON RF SCHEMATIC DIAGRAM.
11. REPLACE SIDE PANEL, RIGHT, 112871-00 WITH ITEM 13.
12. INSTALL SSA (U1) USING #4-40 HARDWARE PER WORKMANSHIP STD 87-800299. LOCATE IN APPROXIMATE POSITION SHOWN.
    CONNECT POWER TO SSA (U1) AS FOLLOWS -
    FROM: U1 (+12V) TO: A3TP4 WITH ITEM 59.
    FROM: U1 (GND) TO: A3TP1 WITH ITEM 55.
13. CONNECT POWER TO ELAPSE TIME METER AS FOLLOWS: TOP WIRE TO TB1-2 AND BOTTOM WIRE TO TB1-3.

FRONT PANEL TABLE 1

PART NO.	B OPTION	E OPTION	J OPTION
D01000417-12			
D01000417-15		X	
D01000417-13	X		
D01000417-17	X	X	
D01000417-00			X
D01000417-02		X	X
D01000417-03	X		X
D01000417-05	X	X	X

REAR PLATE TABLE 2

PART NO.	H OPTION	J OPTION
C01000418-00		
C01000418-01	X	
C01000418-03		X
C01000418-05	X	X

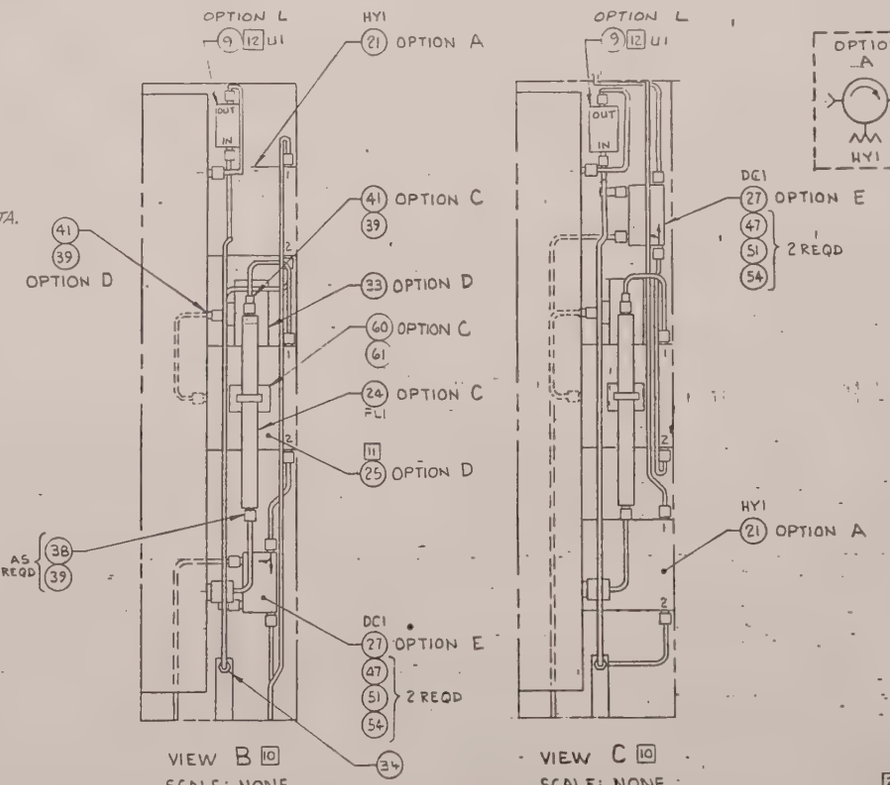

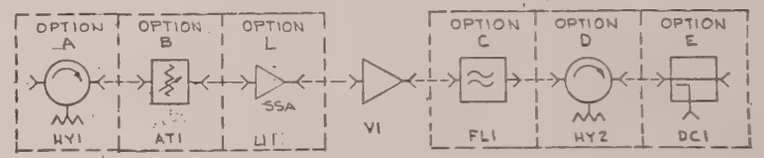

RF SCHEMATIC DIAGRAM
(ADD OPTIONS AS SPECIFIED IN ORDER SHOWN ABOVE)

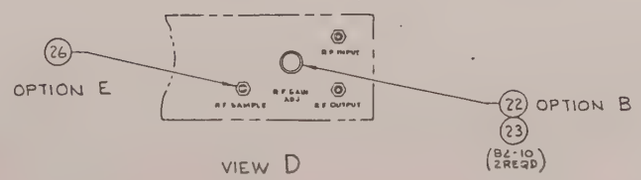

VIEW D
SCALE: NONE

ITEM	DESCRIPTION	IDENTIFYING NUMBER	QTY ALL MODELS	QTY WITH OPTION	OPTIONS
67					
66					
65					
64					
63	SCREW PAN HD 6-32 x 7/16 LG	12-222006-07	4		
62	LOCK WASHER, INTERNAL #6	14-331106	4		
61	CLAMP, CABLE TIE	22-119654		1	C
60	MOUNT TIE	22-119603		1	
59	WIRE, TYPE EE, 24 AWG, BLACK	BI-288700		AR	H
58	SHRINK TUBING 1/8 DIA	88-488001		AR	
57					
56					
55					
54	WASHER, LOCK, #2	14-202002		AR	A,E,D
53					
52					
51	WASHER, FLAT, #2	14-122002		AR	A,E,D
50					
49					
48	SCREW, PAN HD, 2-56 x 5/16 LG	12-162002-05		2	D
47	SCREW, PAN HD, 2-56 x 1 1/4 LG	12-162002-22		2	E
46	SCREW, PAN HD, 2-56 x 5/16 LG	12-162002-05		2	A

LIST OF MATERIALS

UNLESS OTHERWISE SPECIFIED DIMENSIONS ARE IN INCHES
DECIMALS: 1PL ± .1 2PLC .02
3PL ± .005 FRAC ± 1/64
ANG ± 1° SURFACE FINISH
MATERIAL
SPEC NO
FINISH
CONTRACT NUMBER
DR
CHK
APPD
APPD
DESIGN ACTIVITY APPROVAL
CUSTOMER APPROVAL

varian
MICROWAVE EQUIPMENT DIVISION
SANTA CLARA, CALIFORNIA

TWTA FINAL ASSEMBLY

VEL-6940K1 & VEL-6941K1 SERIES 1

SIZE	CODE IDENT NO	
D	59782	01000379 L

SCALE — CLASS A SHEET 2 OF 2

SUPERSEDES

01000379 D

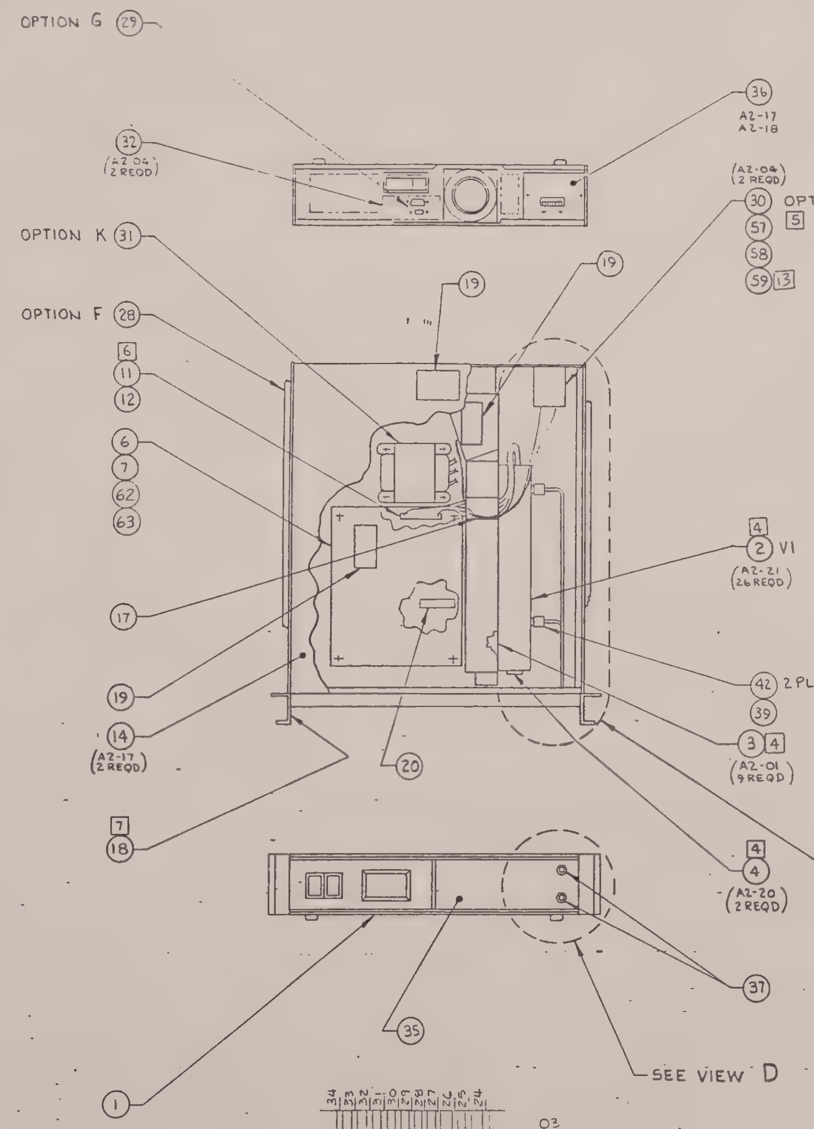

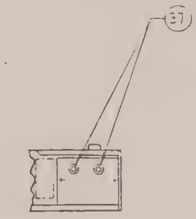

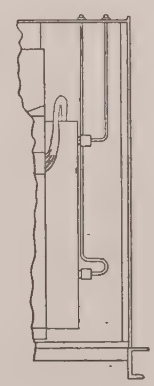

VIEW A
OPTION J

SEE VIEW A (REAR RF INPUT & OUTPUT)
SEE VIEW B (FRONT RF INPUT & OUTPUT ALL RF OPTIONS SHOWN)
SEE VIEW C (REAR RF INPUT & OUTPUT ALL RF OPTIONS SHOWN)

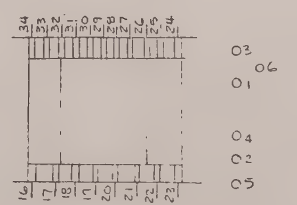

VIEW E

HV TRANSFORMER AND PCB; SOLDER CAPACITOR (P/N 41-299398) FROM 28 TO 1 AND FROM 23 TO 2. COVER LEADS WITH #18 HV SLEEVING (P/N 88-489806). SECURE CAPACITORS TO PCB WITH RTV.

	DESCRIPTION	EO	DATE	APPROVAL
A	NC E.O.	15377	[illegible]	
B	NC EO	[illegible]		
C	[illegible]	[illegible]		
D	NC EO	20995	[illegible]	
E	NC EO	[illegible]		
F	NC EO	[illegible]	3-5-83	
G	NC E.O.	[illegible]		
H	NC E.C.O.	21127	7/21/83	

LIST OF MATERIALS CONTINUED ON SHEET 2

OPTIONS	QTY WITH OPTION	QTY ALL MODELS	IDENTIFYING NUMBER	DESCRIPTION	CODE IDENT	ITEM
		REF	D135223-00	OUTLINE		45
		REF	C01001000	TWTA MODEL NUMBER BREAKDOWN		44
		1	01000420-00	SHIP KIT		43
		2	58-180150	CONNECTOR, PLUG, TNC		42
C	AR		58-180117	CONNECTOR, JACK, SMA		41
D & E	1		58-180102	ADAPTER, SMA, PLUG TO PLUG		40
	AR	AR	82-299901	CABLE, SEMI-RIGID, .141		39
	AR		58-180100	CONNECTOR, PLUG, SMA		38
		2	58-180179	CONNECTOR, BULKHEAD JACK, TYPE N		37
H, J		1	SEE TABLE 2	PLATE, REAR		36
B, E, J		1	SEE TABLE 1	PANEL, FRONT, RIGHT		35
B		2	51-831001	90° BEND WSMA .141 CABLE		34
						33
		1 [9]	B01000133-00	COVER PLATE		32
K	1		01000443-01	230 OPTION KIT		31
H	1 [5]		76-789814	INDICATOR, ELAPSED TIME, 115V, 50Hz		30
			76-789815	INDICATOR, ELAPSED TIME, 115V, 60Hz		
G	1		C01000444-00	REMOTE CONTROL OPTION KIT		29
F	1PR		21-301120	SLIDE, ZERO #C-300-5-20		28
E	1		83-330014	DIRECTIONAL COUPLER		27
	1		58-180179	CONNECTOR, BULKHEAD JACK, TYPE N		26
D	1		A057648-02	ISOLATOR, OUTPUT		25
C	1		83-460032	HARMONIC FILTER		24
B	1		23-508002	KNOB		23
	1		83-439949	ATTENUATOR, VARIABLE		22
A	1		83-469855	ISOLATOR, INPUT		21
		1	A01000457-00	ASSY, CONNECTOR		20
		3	B112379-00	LABEL, DANGER		19
		1	A01000500	LABEL		18
		1	A01000503	CHANNEL WIRING		17
		AR	88-298900	THERMAL COMPOUND		16
						15
		1	C135207-00	COVER, MODIFIED		14
D	1		C01000398	MOD., SIDE PANEL, RIGHT		13
[11]		6	51-407110	CONNECTOR SOCKET MOLEX #08-50-0106		12
		1	51-411032	CONNECTOR, 14 SOC, MOLEX #09-50-3141		11
						10
[12] L	1		01008518-01	SSA DRIVER		9
						8
		1	C135187-04	STAND-OFF		7
		1	C135186-00	COVER, HIGH VOLTAGE		6
						5
		1	71-629812	SWITCH, THERMOSTATIC		4
		1	D135202-00	HEATSINK		3
		1	VTS-615081	TWT		2
	SEE VIEW E	1	E135216-00	ASSY, POWER SUPPLY		1

[2] LIST OF MATERIALS

STANDARD OPTIONS

OPTION	DESCRIPTION
L	SSA DRIVER
A	INPUT ISOLATOR
B	INPUT ATTENUATOR
C	HARMONIC FILTER
D	OUTPUT ISOLATOR
E	OUTPUT SAMPLE PORT
F	CHASSIS SLIDES
G	REMOTE INTERFACE
H	ELAPSED TIME METER
J	REAR RF CONNECTOR
K	230 VAC PRIME PWR

NEXT ASSEMBLY	USED ON
APPLICATION	

UNLESS OTHERWISE SPECIFIED DIMENSIONS ARE IN INCHES
DECIMALS. 1PL ± .1 2PL ± .02
3PL ± .005 FRAC ± 1/64
ANG ± 1° SURFACE FINISH ✓
MATERIAL
SPEC NO
FINISH

CONTRACT NUMBER

DR	L Ado	6/21/81
CHK	[illegible]	[illegible]
APPD	[illegible]	7/7/81
APPD	[illegible]	7/7/81

DESIGN ACTIVITY APPROVAL
CUSTOMER APPROVAL

varian
MICROWAVE EQUIPMENT OPERATIONS
SANTA CLARA, CALIFORNIA

TWTA FINAL ASSEMBLY VZS-6951K1 SERIES [1]

SIZE	CODE IDENT NO.		
D	59782	01000380	H

SCALE — CLASS A SHEET 1 OF 2
SUPERSEDES

D 01000380

REVISIONS					
ZONE	LTR	DESCRIPTION	ECO	DATE	APPROVED
		SEE SHEET 1			

NOTES:

1. IF THE LAST FOUR DIGITS OF THE MODEL NO. ARE NUMERICALLY CODED (ie 6951K1XXXX) THE MODEL IS NOT COVERED IN THIS DRAWING. SEE DRAWING 0100XXXX.
2. INSTALL OPTIONS ACCORDING TO TWTA MODEL NO. EXAMPLE, IF TWTA MODEL NO. IS 6951K1ACEG OPTIONS ARE A, C, E AND G. SEE RF SCHEMATIC DIAGRAM FOR ASSEMBLIES OF OPTIONS A B C D & E
3. STANDARD HARDWARE PER C110625, EXAMPLE (A7-18 2 REQD)
4. APPLY A UNIFORM THIN COATING OF THERMAL COMPOUND ITEM 16 BETWEEN MOUNTING SURFACES OF ITEMS 2, 3, AND 4
5. SELECT EITHER 50HZ OR 60HZ ELAPSED TIME INDICATOR ITEM 30 AS SPECIFIED ON CUSTOMER ORDER. CONNECT ITEM 30 TO TB1-3 AND TB1-2 USING ITEMS 57, 58 AND 59.
6. CONNECT TWT ITEM 2 TO CONNECTOR ITEM 11 WITH CONNECTOR SOCKETS ITEM 12 PER A01000419.
7. NAME PLATE DATA
   TWTA: (USE MODEL NO. SPECIFIED ON CUSTOMER ORDER)
   FREQ: 2.0-4.0 GHz
   GAIN: REFER TO K-SERIES RF PERFORMANCE SPEC. (A01000818) FOR GAIN OF EACH TWTA.
8. ———
9. IF OPTION G IS REQUIRED DELETE ITEM 32.
10. INSTALL REQUIRED OPTIONS IN THE APPROXIMATE PLACE AS SHOWN AND CONNECT RF COMPONENTS IN ORDER SHOWN ON RF SCHEMATIC DIAGRAM.
11. *REPLACE SIDE PANEL, RIGHT, 112871-00 WITH ITEM 13.*
12. INSTALL SSA (U1) USING #4-40 HARDWARE PER WORKMANSHIP STD 87-800299, LOCATE IN APPROXIMATE POSITION SHOWN.
    CONNECT-POWER TO SSA (U1) AS FOLLOWS -
    FROM: U1 (+12V) TO: A3TP4 WITH ITEM 59.
    FROM: U1 (GND) TO: A3TP1 WITH ITEM 58.
13. CONNECT POWER TO ELAPSE TIME METER BY CONNECTING TOP WIRE TO TB1-2 AND BOTTOM WIRE TO TB1-3.

FRONT PANEL TABLE 1			
PART NO.	B OPTION	E OPTION	J OPTION
D01000417-12			
D01000417-15		X	
D01000417-13	X		
D01000417-17	X	X	
D01000417-00			X
D01000417-02		X	X
D01000417-03	X		X
D01000417-05	X	X	X

REAR PLATE TABLE 2		
PART NO.	H OPTION	J OPTION
C01000418-00		
C01000418-01	X	
C01000418-03		X
C01000418-05	X	X

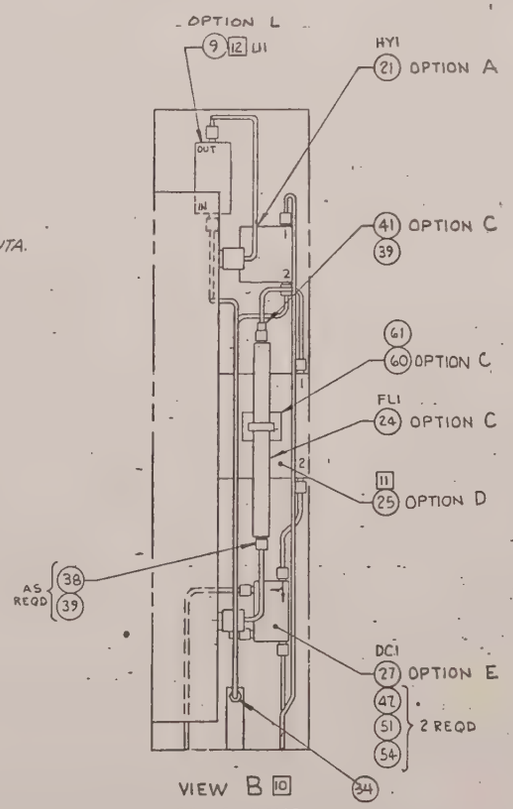

VIEW B [10]
SCALE: NONE
FRONT RF INPUT & OUTPUT
ALL RF OPTIONS SHOWN

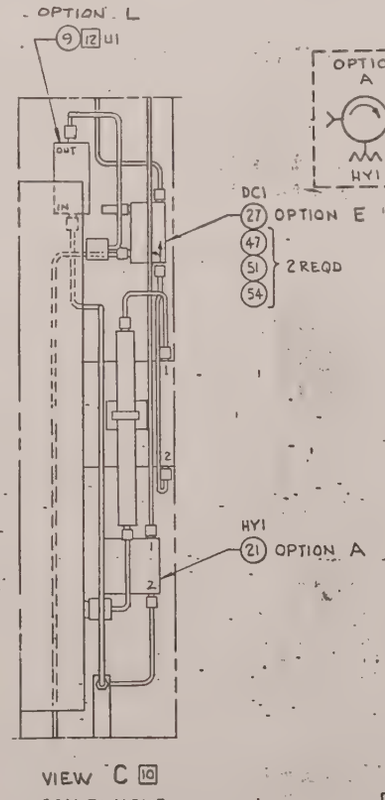

VIEW C [10]
SCALE: NONE
REAR RF INPUT & OUTPUT
ALL RF OPTIONS SHOWN

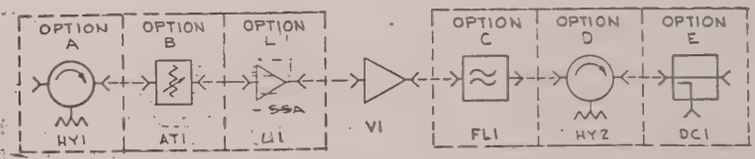

RF SCHEMATIC DIAGRAM
(ADD OPTIONS AS SPECIFIED IN ORDER SHOWN ABOVE)

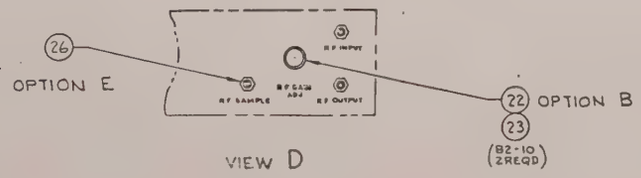

VIEW D
SCALE: NONE

ITEM	CODE IDENT	DESCRIPTION	IDENTIFYING NUMBER	QTY ALL MODELS	QTY WITH OPTION	OPTIONS
67						
66						
65						
64						
63		SCREW, PAN HD, 6-32 x 7/16 LG.	12-222 006-07	4		
62		LOCK WASHER, INTERNAL, #6	14-301 106	4		
61		CLAMP, CABLE TIE	22-119654		1	C
60		MOUNT, T.E	22-119603		1	
59		WIRE, TYPE EE, 24AWG, BLACK	81-288700		AR	H
58		SHRINK TUBING V8 DIA	88-488001		AR	
57						
56						
55						
54		WASHER, LOCK, #2	14-202002		AR	A,E,D
53						
52						
51		WASHER, FLAT, #2	14-122002		AR	A,E,D
50						
49						
48		SCREW, PAN HD, 2-56 x 5/16 LG	12-162002-05		2	D
47		SCREW, PAN HD, 2-56 x 1¼ LG	12-162902-22		2	E
46		SCREW, PAN HD, 2-56 x 5/16 LG	12-162002-05		2	A

[2] LIST OF MATERIALS R6E6

UNLESS OTHERWISE SPECIFIED DIMENSIONS ARE IN INCHES
DECIMALS: 1PL ± .1 2PL ± .02
3PL ± .005 FRAC ± 1/64
ANG ± 1° SURFACE FINISH
MATERIAL
SPEC NO
FINISH

CONTRACT NUMBER
DR
CHK
APPD
APPR
DESIGN ACTIVITY APPROVAL
CUSTOMER APPROVAL

varian
MICROWAVE EQUIPMENT OPERATIONS
SANTA CLARA, CALIFORNIA

TWTA FINAL ASSEMBLY VZS-6951K1 SERIES [1]

SIZE	CODE IDENT NO		
D	59782	01000380	H

SCALE — SHEET 2 OF 2

SUPERSEDES

01000380

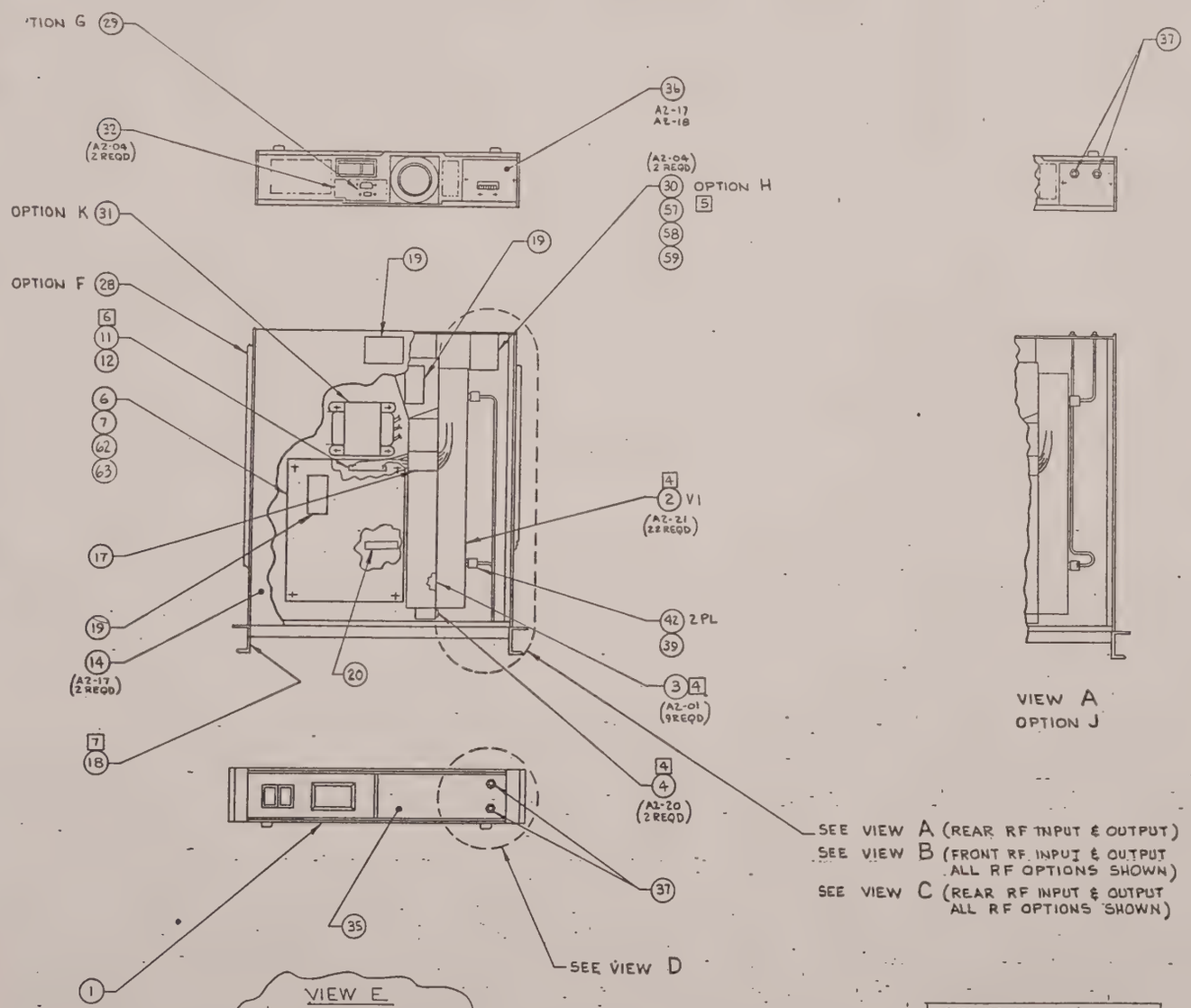

VIEW A
OPTION J

SEE VIEW A (REAR RF INPUT & OUTPUT)
SEE VIEW B (FRONT RF INPUT & OUTPUT ALL RF OPTIONS SHOWN)
SEE VIEW C (REAR RF INPUT & OUTPUT ALL RF OPTIONS SHOWN)

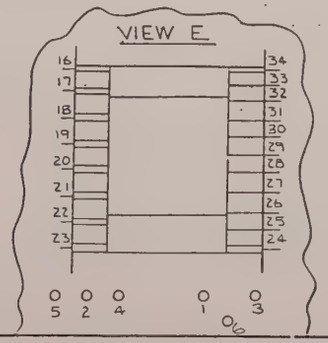

H.V. TRANSFORMER & P.C.B. SOLDER CAPACITORS (P/N 41-299898) FROM 20 TO 1 & FROM 23 TO 2. COVER LEADS WITH #18 H.V. SLEEVING (P/N 88-489806) SECURE CAPACITORS TO P.C.B. WITH RTV.

STANDARD OPTIONS	
OPTION	DESCRIPTION
A	INPUT ISOLATOR
B	INPUT ATTENUATOR
C	HARMONIC FILTER
D	OUTPUT ISOLATOR
E	OUTPUT SAMPLE PORT
F	CHASSIS SLIDES
G	REMOTE INTERFACE
H	ELAPSED TIME METER
J	REAR RF CONNECTOR
K	230 VAC PRIME PWR

REVISIONS

ZONE	LTR	DESCRIPTION	EO	DATE	
	A	INC EO	15374	9-28-81	K
	B	INC EO	15803	4-16-82	JS
	C	INC. E.O	16573	illegible	illegible
	D	INC E C	20415	3-1-84	BE
	E	INC E O.	21555	9 10 84	D.KH/BE
	F	INC E.O.	22092	10.22.84	D.KH/BE
	G	INC. ECO	27843	3.2.87	KC/BE

LIST OF MATERIALS CONTINUED ON SHEET 2

		REF	D135223-00	OUTLINE	45
		REF	C01301000	TWTA MODEL NUMBER BREAKDOWN	44
		1	01000420-00	SHIP KIT	43
		2	58-180150	CONNECTOR, PLUG; TNC	42
C'	1		58-180117	CONNECTOR, JACK; SMA	41
D E E	1		58-180102	ADAPTER, SMA, PLUG TO PLUG	40
	AR	AR	82-299901	CABLE, SEMI-RIGID, .141	39
	AR		58-180100	CONNECTOR, PLUG, SMA	38
		2	58-180179	CONNECTOR, BULKHEAD JACK, TYPE N	37
H,J		1	SEE TABLE 2	PLATE, REAR	36
B,E,J		1	SEE TABLE 1	PANEL, FRONT, RIGHT	35
					34
B		1	81-831001	90° BEND W/SMA, .141 CABLE	33
		1 [9]	B01000133-00	COVER PLATE	32
K	1		B01000443-01	230 OPTION KIT	31
H	1 [5]		76-789814	INDICATOR, ELAPSED TIME, 115V, 50HZ	30
			76-789815	INDICATOR, ELAPSED TIME, 115V, 60HZ	
G	1		C01000444-00	REMOTE CONTROL OPTION KIT	29
F	1PR		21-301120	SLIDE, ZERO #C-300-S-20	28
E	1		83-330014	DIRECTIONAL COUPLER	27
	1		58-180179	CONNECTOR, BULKHEAD JACK, TYPE N	26
D	1		A05764B-02	ISOLATOR, OUTPUT	25
C	1		83-460032	HARMONIC FILTER	24
B	1		23-508002	KNOB	23
	1		83-439949	ATTENUATOR, VARIABLE	22
A	1		83-469855	ISOLATOR, INPUT	21
		1	A01000457-00	ASSY, CONNECTOR	20
		3	B112379-00	LABEL, DANGER	19
		1	A01000500	LABEL	18
		1	A01000503	CHANNEL WIRING	17
		AR	88-298900	THERMAL COMPOUND	16
					15
		1	C135207-00	COVER, MODIFIED	14
[11] D	1		C01000398	MOD., SIDE PANEL, RIGHT	13
			51-407110	CONNECTOR SOCKET MOLEX #08-50-0106	12
		1	51-411032	CONNECTOR, 14 SOC, MOLEX #09-50-3141	11
					10
					9
					8
		1	C135187-04	STAND-OFF	7
		1	C135186-00	COVER, HIGH VOLTAGE	6
					5
		1	71-629812	SWITCH, THERMOSTATIC; KLIXON #MI-203200/82	4
		1	D135202-00	HEATSINK	3
		1	VTS-6150J1	TWT	2
	SEE VIEW E	1	E135216-00	ASSY, POWER SUPPLY	1
[2] OPTIONS	QTY WITH OPTION	QTY ALL MODELS	IDENTIFYING NUMBER	DESCRIPTION	CODE IDENT / ITEM

LIST OF MATERIALS

			UNLESS OTHERWISE SPECIFIED DIMENSIONS ARE IN INCHES	CONTRACT NUMBER
			DECIMALS: 1PL ± .1 2PL ± .02	DR L. Ando 6/23/81
			3PL ± .005 FRAC ± 1/64	CHK [illegible] 6/23/81
			ANG ± 1° SURFACE FINISH ✓	APPD [illegible] 7/1/81
			MATERIAL	APPD [illegible] 7/8/81
NEXT ASSEMBLY	USED ON		SPEC NO	DESIGN ACTIVITY APPROVAL
APPLICATION			FINISH	CUSTOMER APPROVAL

varian — MICROWAVE EQUIPMENT OPERATIONS, SANTA CLARA, CALIFORNIA

TWTA FINAL ASSEMBLY VZS-6951K2 SERIES [1]

SIZE	CODE IDENT NO		
D	59782	01000381	G

SCALE — CLASS A SHEET 1 OF 2

SUPERSEDES

01000381

NOTES:

1. IF THE LAST FOUR DIGITS OF THE MODEL NO. ARE NUMERICALLY CODED (ie 6951K2XXXX) THE MODEL IS NOT COVERED IN THIS DRAWING. SEE DRAWING 01COXXXX.
2. INSTALL OPTIONS ACCORDING TO TWTA MODEL NO. EXAMPLE, IF TWTA MODEL NO. IS 6951K2ACEG OPTIONS ARE A, C, E AND G SEE 'RF SCHEMATIC DIAGRAM FOR ASSEMBLIES OF OPTIONS A B C D E E
3. STANDARD HARDWARE PER C110625, EXAMPLE (A2-18 (2 REQD))
4. APPLY A UNIFORM THIN COATING OF THERMAL COMPOUND ITEM 16 BETWEEN MOUNTING SURFACES OF ITEMS 2, 3, AND 4.
5. SELECT EITHER 50HZ OR 60HZ ELAPSED TIME INDICATOR ITEM 30 AS SPECIFIED ON CUSTOMER ORDER. CONNECT ITEM 30 TO TB1-3 AND TB1-2 USING ITEMS 57, 58 AND 59.
6. CONNECT TWT ITEM 2 TO CONNECTOR ITEM 11 WITH CONNECTOR SOCKETS ITEM 12 PER A01000419.
7. NAME PLATE DATA

   TWTA: (USE MODEL NO. SPECIFIED ON CUSTOMER ORDER)

   FREQ: 2.0-4.0 GHz

   GAIN: REFER TO K-SERIES RF PERFORMANCE SPEC. (A01000818) FOR GAIN OF EACH TWTA.
8. ——
9. IF OPTION G IS REQUIRED DELETE ITEM 32.
10. INSTALL REQUIRED OPTIONS IN THE APPROXIMATE PLACE AS SHOWN AND CONNECT RF COMPONENTS IN ORDER SHOWN ON R F SCHEMATIC DIAGRAM.
11. *REPLACE SIDE PANEL. RIGHT. 112871-00 WITH ITEM 13.*

FRONT PANEL TABLE 1			
PART NO	B OPTION	E OPTION	J OPTION
D01000417-12			
D01000417-15		X	
D01000417-13	X		
D01000417-17	X	X	
D01000417-00			X
D01000417-02		X	X
D01000417-03	X		X
D01000417-05	X	X	X

REAR PLATE TABLE 2		
PART NO	H OPTION	J OPTION
C01000418-00		
C01000418-01	X	
C01000418-03		X
C01000418-05	X	X

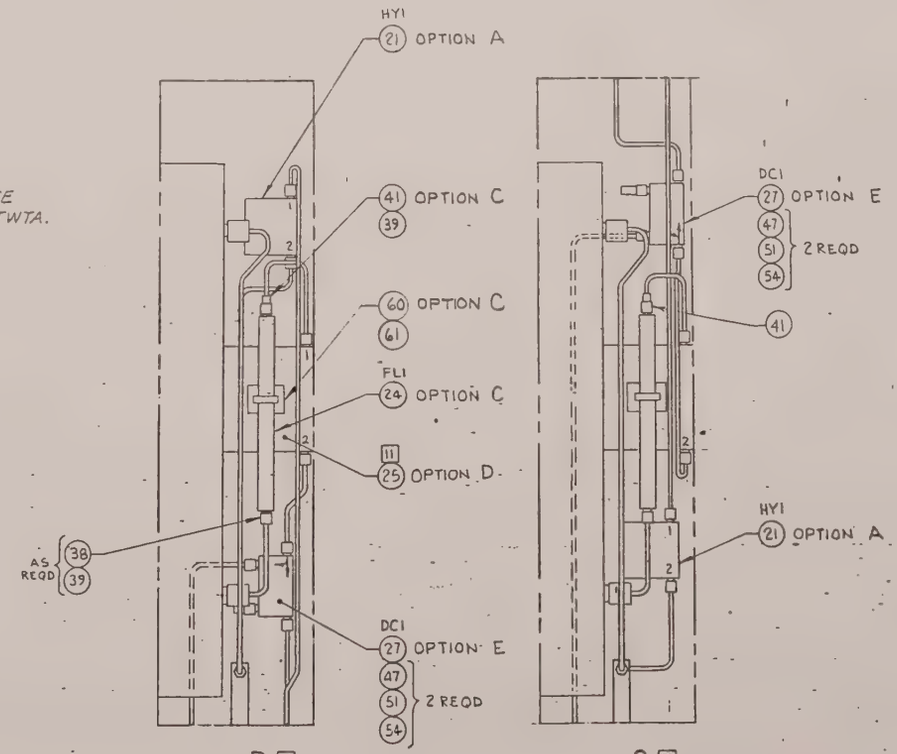

VIEW B [10]
SCALE: NONE
FRONT R.F INPUT & OUTPUT
ALL RF OPTIONS SHOWN

VIEW C [10]
SCALE: NONE
REAR RF INPUT & OUTPUT
ALL RF OPTIONS SHOWN

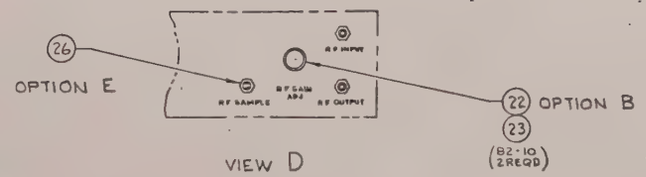

VIEW D
SCALE: NONE

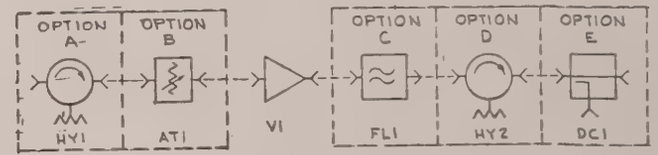

R F SCHEMATIC DIAGRAM
(ADD OPTIONS AS SPECIFIED IN ORDER SHOWN ABOVE)

OPTIONS	QTY WITH OPTION	QTY ALL MODELS	IDENTIFYING NUMBER	DESCRIPTION	CODE IDENT	ITEM
						67
						66
						65
						64
		4	12-222006-07	SCREW, PAN HD, 6-32 x 7/16 LG.		63
		4	14-331106	LOCK WASHER, INTERNAL, #6		62
C	1		22-119654	CLAMP, CABLE TIE		61
	1		22-119654	MOUNT, TIE		60
H	AR		81-288700	WIRE, TYPE EE, 24AWG, BLACK		59
	AR		88-488001	SHRINK TUBING 1/8 DIA		58
	2		15-999902	TERMINAL, QUICK DISCONNECT		57
						56
						55
A,E,D	AR		14-202002	WASHER, LOCK, #2		54
						53
						52
A,E,D	AR		14-122002	WASHER, FLAT, #2		51
						50
						49
D	2		12-162002-05	SCREW, PAN HD, 2-56 x 5/16 LG		48
E	2		12-162002-22	SCREW, PAN HD, 2-56 x 1 1/4 LG		47
A	2		12-162002-05	SCREW, PAN HD, 2-56 x 5/16 LG		46

[2] LIST OF MATERIALS

UNLESS OTHERWISE SPECIFIED DIMENSIONS ARE IN INCHES
DECIMALS: 1PL ± .1 2PL ± .02
3PL ± .005 FRAC ± 1/64
ANG ± 1° SURFACE FINISH ✓
MATERIAL
SPEC NO.
FINISH

CONTRACT NUMBER
DR
CHK
APPD
APPD
DESIGN ACTIVITY APPROVAL
CUSTOMER APPROVAL

varian
MICROWAVE EQUIPMENT OPERATIONS
SANTA CLARA, CALIFORNIA

TWTA FINAL ASSEMBLY VZS-6951K2 SERIES [1]

SIZE D | CODE IDENT NO 59782 | 01000381 | G
SCALE — | SHEET 2 OF 2

SUPERSEDES

01000381

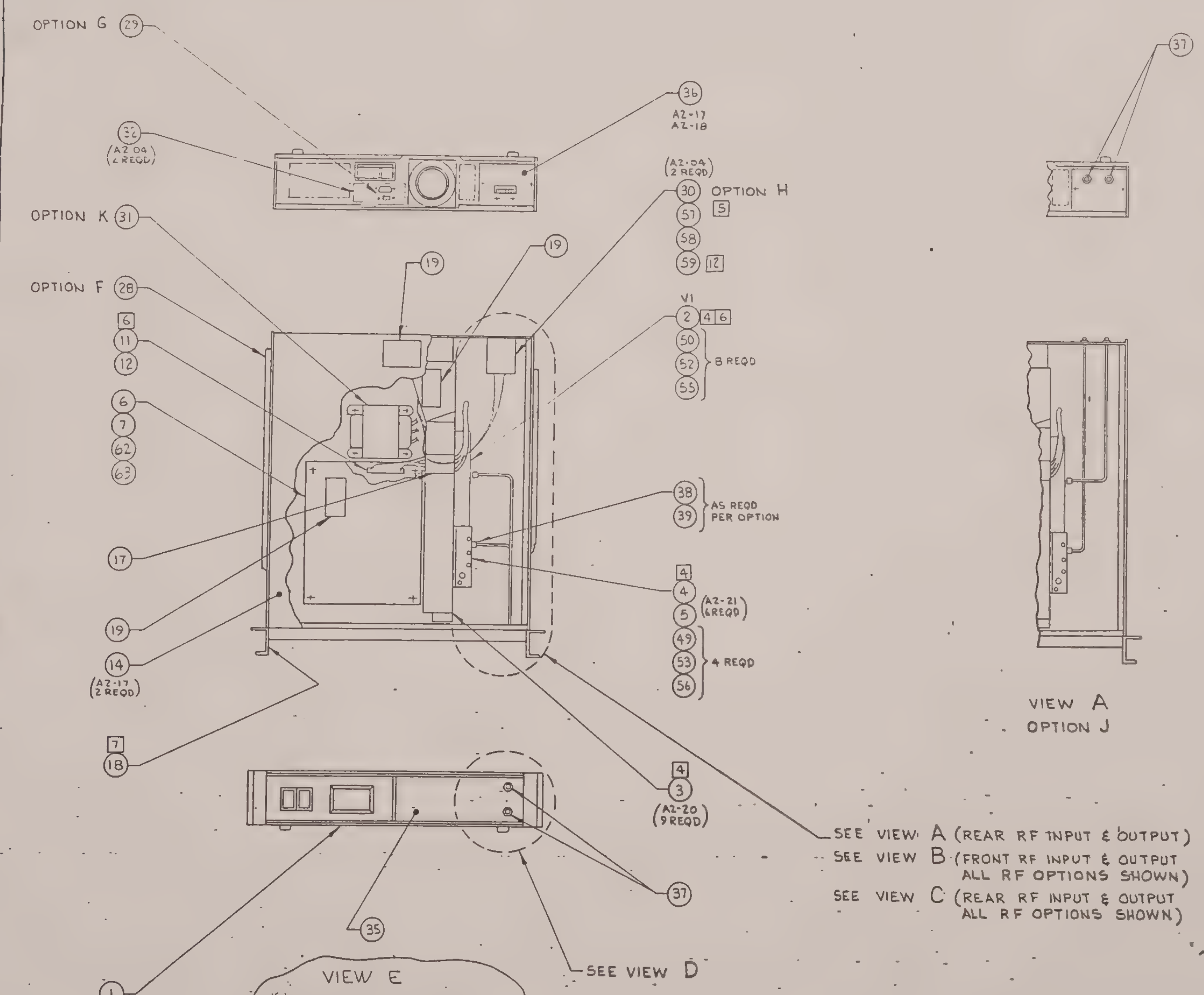

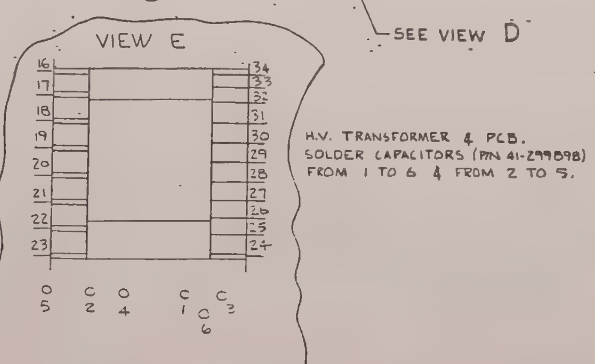

REVISIONS					
ZONE	LTR	DESCRIPTION	EO	DATE	APPROVED
	A	NC E.O.	1537[illegible]	9-29-81	[illegible]
	B	NC E.O.	[illegible]	[illegible]	[illegible]
	C	NC E.O.	[illegible]	[illegible]	[illegible]
	D	[illegible]	[illegible]	[illegible]	[illegible]
	E	NC ECO	[illegible]	[illegible]	[illegible]
	F	NC ECO	[illegible]	[illegible]	[illegible]

LIST OF MATERIALS CONTINUED ON SHEET 2

OPTIONS	QTY WITH OPTION	QTY ALL MODELS	IDENTIFYING NUMBER	DESCRIPTION	CODE IDENT	ITEM
		REF	D135223-00	OUTLINE		45
		REF	C01001000	TWTA MODEL NUMBER BREAKDOWN		44
		1	01000420-00	SHIP KIT		43
						42
						41
DEE	1		58-180102	ADAPTER, SMA, PLUG TO PLUG		40
	AR	AR	82-299901	CABLE, SEMI-RIGID, .141		39
	AR	2	58-180100	CONNECTOR, PLUG, SMA		38
		2	58-180179	CONNECTOR, BULKHEAD JACK, TYPE N		37
H, J		1	SEE TABLE 2	PLATE, REAR		36
B, E, J		1	SEE TABLE 1	PANEL, FRONT, RIGHT		35
						34
B		2	31-831001	90° BEND W/SMA, .141 CABLE		33
		1 9	B01000133-00	COVER PLATE		32
K	1		B01000443-01	230 OPTION KIT		31
H	1 5		76-789814	INDICATOR, ELAPSED TIME, 115V, 50HZ		30
			76-789815	INDICATOR, ELAPSED TIME, 115V, 60HZ		
G	1		C01000444-00	REMOTE CONTROL OPTION KIT		29
F	1PR		21-301120	SLIDE, ZERO #C-300-S-20		28
E	1		83-330003/83-330037	DIRECTIONAL COUPLER		27
	1		58-180179	CONNECTOR, BULKHEAD JACK, TYPE N		26
D	1		A057648-03	ISOLATOR, OUTPUT		25
C	1		83-460010	HARMONIC FILTER		24
B	1		23-508002	KNOB		23
	1		83-439970	ATTENUATOR, VARIABLE		22
A	1		83-469856	ISOLATOR, INPUT		21
						20
-		3	B112379-00	LABEL, DANGER		19
		1	A01000500	LABEL		18
		1	A01000503	CHANNEL WIRING		17
		AR	88-298900	THERMAL COMPOUND		16
						15
-		1	C135207-00	COVER, MODIFIED		14
						13
		4	51-407110	CONNECTOR SOCKET MOLEX #08-50-0106		12
		1	51-411032	CONNECTOR, 14 SOC, MOLEX #09-50-3141		11
						10
11 L	1		01008818-02	SSA DRIVER		9
						8
-		1	C135187-04	STAND OFF		7
		1	C135186-00	COVER, HIGH VOLTAGE		6
		1	C135225-01	HEAT SPREADER		5
		1	C135225-00	HEAT SPREADER		4
		1	D135202-00	HEATSINK		3
		1	VTC-6166B1	TWT		2
	SEE VIEW E	1	E135216-00	ASSY, POWER SUPPLY		1

2 LIST OF MATERIALS

STANDARD OPTIONS	
OPTION	DESCRIPTION
L	SSA DRIVER
A	INPUT ISOLATOR
B	INPUT ATTENUATOR
C	HARMONIC FILTER
D	OUTPUT ISOLATOR
E	OUTPUT SAMPLE PORT
F	CHASSIS SLIDES
G	REMOTE INTERFACE
H	ELAPSED TIME METER
J	REAR RF CONNECTOR
K	230 VAC PRIME PWR

NEXT ASSEMBLY	USED ON
APPLICATION	

UNLESS OTHERWISE SPECIFIED DIMENSIONS ARE IN INCHES		CONTRACT NUMBER	
DECIMALS 1PL ± .1 2PL ± .02		DR [illegible]	6/15/81
3PL ± .005	FRAC ± 1/64	CHK [illegible]	6/23/81
ANG ± 1°	SURFACE FINISH ✓	APPD [illegible]	[illegible]
MATERIAL		APPD [illegible]	6/24/81
SPEC NO		DESIGN ACTIVITY APPROVAL	
FINISH		CUSTOMER APPROVAL	

varian — MICROWAVE EQUIPMENT OPERATIONS, SANTA CLARA, CALIFORNIA

TWTA FINAL ASSEMBLY VZC-6961K1 SERIES 1

SIZE	CODE IDENT NO		
D	59782	01000382	F
SCALE —	CLASS A	SHEET 1 OF 2	

SUPERSEDES

01000382

REVISIONS					
ZONE	LTR	DESCRIPTION	EO	DATE	APPROVED
		SEE SHEET 1			

NOTES:

1. IF THE LAST FOUR DIGITS OF THE MODEL NO. ARE NUMERICALLY CODED (ie 6961K1XXXX) THE MODEL IS NOT COVERED IN THIS DRAWING. SEE DRAWING 01000XXX.
2. INSTALL OPTIONS ACCORDING TO TWTA MODEL NO EXAMPLE, IF TWTA MODEL NO. IS 6961K1ACEG OPTIONS ARE A, C, E AND G SEE RF SCHEMATIC DIAGRAM FOR ASSEMBLIES OF OPTIONS A B C D & E
3. STANDARD HARDWARE PER C110625, EXAMPLE (A2-18 2 REQD)
4. APPLY A UNIFORM THIN COATING OF THERMAL COMPOUND ITEM 16 BETWEEN MOUNTING SURFACES OF ITEMS 2, 3, 4 AND 5
5. SELECT EITHER 50HZ OR 60HZ ELAPSED TIME INDICATOR ITEM 30 AS SPECIFIED ON CUSTOMER ORDER. CONNECT ITEM 30 TO TB1-3 AND TB1-2 USING ITEMS 57, 58 AND 59.
6. CONNECT TWT ITEM 2 TO CONNECTOR ITEM 11 WITH CONNECTOR SOCKETS ITEM 12 PER A01000419.
7. NAME PLATE DATA

   TWTA: (USE MODEL NO. SPECIFIED ON CUSTOMER ORDER)

   FREQ: 4.0 ~ 8.0 GHz

   GAIN: REFER TO K-SERIES RF PERFORMANCE SPEC. (A01000818) FOR GAIN OF EACH TWTA.
8. ———
9. IF OPTION G IS REQUIRED DELETE ITEM 32.
10. INSTALL REQUIRED OPTIONS IN THE APPROXIMATE PLACE AS SHOWN AND CONNECT RF COMPONENTS IN ORDER SHOWN ON RF SCHEMATIC DIAGRAM.
11. INSTALL SSA (U1) USING #4-40 HARDWARE PER WORKMANSHIP STD 87-800299, LOCATE IN APPROXIMATE POSITION SHOWN.- CONNECT POWER TO SSA (U1) AS FOLLOWS - FROM: U1 (+12V) TO: A3TP4 WITH ITEM 59. FROM: U1 (GND) TO: A3TP3 WITH ITEM 55.
12. CONNECT POWER TO ELAPSE TIME METER BY CONNECTING TOP WIRE TO TB1-2 AND BOTTOM WIRE TO TB1-3.

FRONT PANEL TABLE 1			
PART NO.	B OPTION	E OPTION	J OPTION
D01000417-12			
D01000417-15		X	
D01000417-13	X		
D01000417-17	X	X	
D01000417-00			X
D01000417-02		X	X
D01000417-03	X		X
D01000417-05	X	X	X

REAR PLATE TABLE 2		
	H OPTION	J OPTION
C01000418-00		
C01000418-01	X	
C01000418-03		X
C01000418-05	X	X

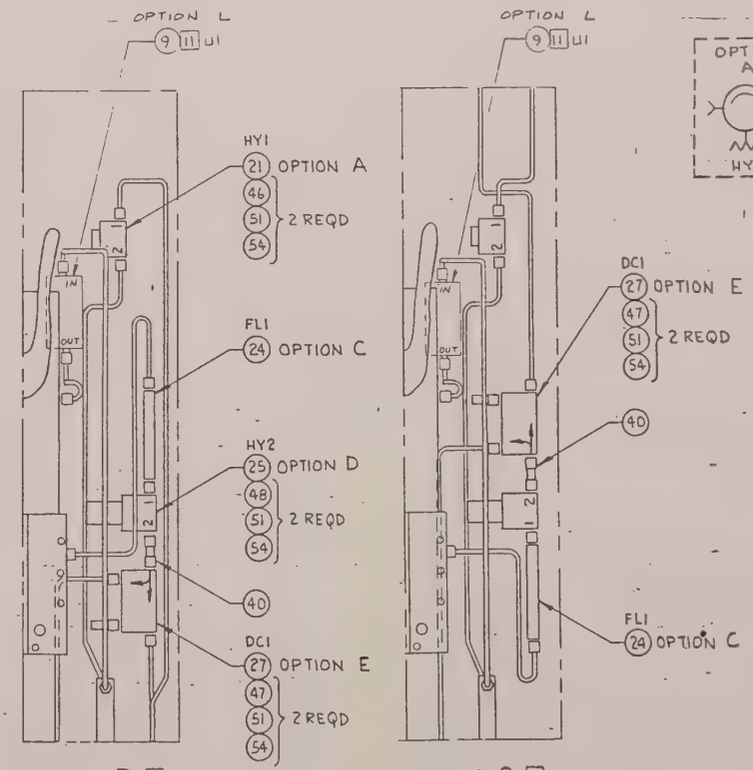

VIEW B [10]
SCALE: NONE
FRONT RF INPUT & OUTPUT
ALL RF OPTIONS SHOWN

VIEW C [10]
SCALE: NONE
REAR RF INPUT & OUTPUT
ALL RF OPTIONS SHOWN

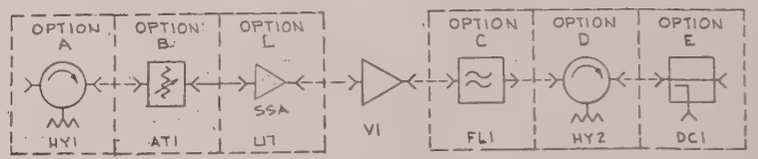

RF SCHEMATIC DIAGRAM
(ADD OPTIONS AS SPECIFIED IN ORDER SHOWN ABOVE)

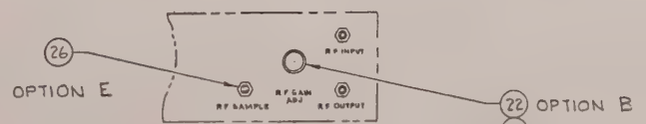

VIEW D
SCALE: NONE

ITEM	CODE IDENT	DESCRIPTION	IDENTIFYING NUMBER	QTY ALL MODELS	QTY WITH OPTION	OPTIONS
67						
66						
65						
64						
63		SCREW, PAN HD, 6-32 x 7/16 LG.	12-222 006-07	4		
62		LOCK WASHER, INTERNAL, #6	14-301 106	4		
61						
60						
59		WIRE, TYPE EE, 24AWG, BLACK	B1-288700		AR	
58		SHRINK TUBING 1/8 DIA	88-488001		AR	H
57						
56		WASHER, LOCK, #6	14-202006	4		
55		WASHER, LOCK, #4	14-202004	8		
54		WASHER, LOCK, #2	14-202002		AR	A,E,D
53		WASHER, FLAT, #6	14-122006	4		
52		WASHER, FLAT, #4	14-122004	8		
51		WASHER, FLAT, #2	14-122002		AR	A,E,D
50		SCREW, SOC HD, 4-40 x 1 1/4 LG	12-312004-22	8		
49		SCREW, PAN HD, 6-32 x 1 3/4 LG	12-222006-26	4		
48		SCREW, PAN HD, 2-56 x 5/16 LG	12-162002-05		2	D
47		SCREW, PAN HD, 2-56 x 1 1/4 LG	12-162002-22		2	E
46		SCREW, PAN HD, 2-56 x 5/16 LG	12-162002-05		2	A

LIST OF MATERIALS

UNLESS OTHERWISE SPECIFIED DIMENSIONS ARE IN INCHES
DECIMALS: 1PL ± .1 2PL ± .02
3PL ± .005 FRAC ± 1/64
ANG ± 1° SURFACE FINISH
MATERIAL
SPEC NO
FINISH

CONTRACT NUMBER
DR
CHK
APPD
APPD
DESIGN ACTIVITY APPROVAL
CUSTOMER APPROVAL

varian
MICROWAVE EQUIPMENT OPERATIONS
SANTA CLARA, CALIFORNIA

TWTA FINAL ASSEMBLY VZC-6961K1 SERIES [1]

SIZE D | CODE IDENT NO 59782 | 01000382 | F
SCALE — | SHEET 2 OF 2

SUPERSEDES

01000382 D

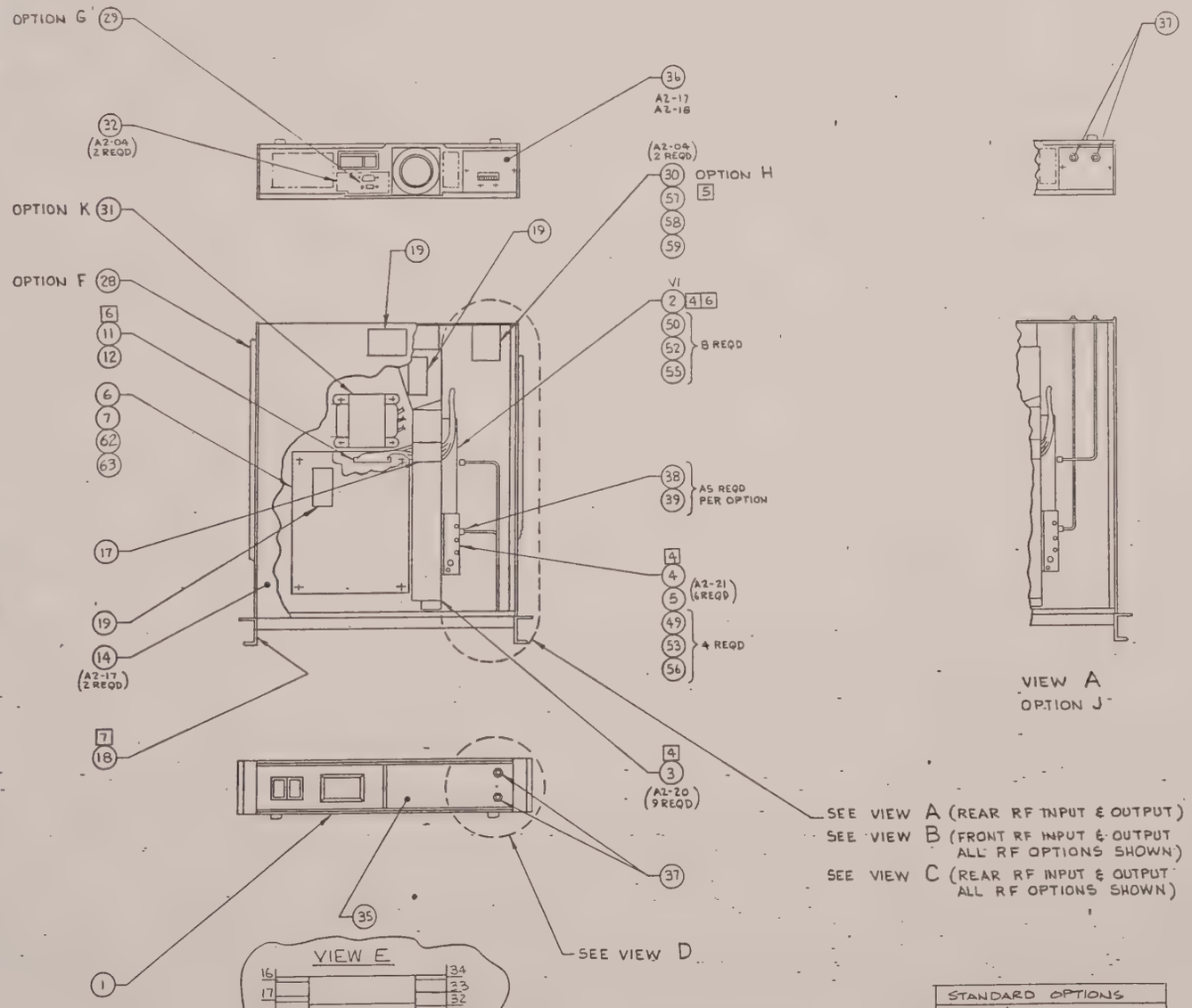

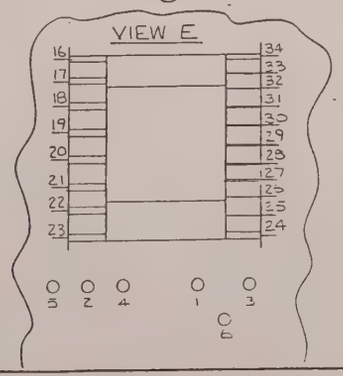

H.V. TRANSFORMER & PCB. SOLDER CAPACITORS (P/N 41-299898) FROM 31 TO 1 & FROM 33 TO 2. COVER LEADS WITH #18 H.V. SLEEVING (P/N BB-489806), SECURE CAPACITORS TO PCB WITH RTV.

STANDARD OPTIONS	
OPTION	DESCRIPTION
A	INPUT ISOLATOR
B	INPUT ATTENUATOR
C	HARMONIC FILTER
D	OUTPUT ISOLATOR
E	OUTPUT SAMPLE PORT
F	CHASSIS SLIDES
G	REMOTE INTERFACE
H	ELAPSED TIME METER
J	REAR RF CONNECTOR
K	230 VAC PRIME PWR

LIST OF MATERIALS CONTINUED ON SHEET 2

OPTIONS	QTY WITH OPTION	QTY ALL MODELS	IDENTIFYING NUMBER	DESCRIPTION	CODE IDENT	ITEM
		REF	D135223-00	OUTLINE		45
		REF	C01001000	TWTA MODEL NUMBER BREAKDOWN		44
			01000420-00	SHIP KIT		43
						42
						41
D&E	1		58-180102	ADAPTER, SMA, PLUG TO PLUG		40
	AR	AR	82-299901	CABLE, SEMI-RIGID, .141		39
	AR	2	58-180100	CONNECTOR, PLUG, SMA		38
		2	58-180179	CONNECTOR, BULKHEAD JACK, TYPE N		37
H,J		1	SEE TABLE 2	PLATE, REAR		36
B,E,J		1	SEE TABLE 1	PANEL, FRONT, RIGHT		35
						34
B			B1-B31001	90° BEND W/SMA, .141 CABLE		33
		1 [9]	B01000133-00	COVER PLATE		32
K	1		B01000443-01	.230 OPTION KIT		31
H	1 [5]		76-789814	INDICATOR, ELAPSED TIME, 115V, 50HZ		30
			76-789815	INDICATOR, ELAPSED TIME, 115V, 60HZ		
G	1		C01000444-00	REMOTE CONTROL OPTION KIT		29
F	1PR		21-301120	SLIDE, ZERO *C-300-S-20		28
E	1		83-330003/83-330087	DIRECTIONAL COUPLER		27
	1		58-180179	CONNECTOR, BULKHEAD JACK, TYPE N		26
D	1		A057648-03	ISOLATOR, OUTPUT		25
C	1		83-460010	HARMONIC FILTER		24
B	1		23-508002	KNOB		23
	1		83-439970	ATTENUATOR, VARIABLE		22
A	1		83-489856	ISOLATOR, INPUT		21
						20
		3	B112379-00	LABEL, DANGER		19
		1	A01000500	LABEL		18
		1	A01000503	CHANNEL WIRING		17
		AR	88-298900	THERMAL COMPOUND		16
						15
		1	C135207-00	COVER, MODIFIED		14
						13
		4	51-407110	CONNECTOR SOCKET MOLEX *08-50-0106		12
		1	51-411032	CONNECTOR, 14 SOC, MOLEX *09-50-3141		11
						10
						9
						8
		1	C135187-04	STAND OFF		7
		1	C135186-00	COVER, HIGH VOLTAGE		6
		1	C135225-01	HEAT SPREADER		5
		1	C135225-00	HEAT SPREADER		4
		1	D135202-00	HEATSINK		3
		1	VTC-6166J1	TWT		2
	SEE VIEW E	1	E135216-00	ASSY, POWER SUPPLY		1

LIST OF MATERIALS

NEXT ASSEMBLY | USED ON | APPLICATION

UNLESS OTHERWISE SPECIFIED DIMENSIONS ARE IN INCHES
DECIMALS: 1PL ± .1 2PL ± .02
3PL ± .005 FRAC ± 1/64
ANG ± 1° SURFACE FINISH ✓
MATERIAL
SPEC NO
FINISH

CONTRACT NUMBER

DR	L. Ando	6/15/81
CHK	[illegible]	6/23/81
APPD	[illegible]	6/23/81
APPD	[illegible]	6/24/81

DESIGN ACTIVITY APPROVAL
CUSTOMER APPROVAL

varian — MICROWAVE EQUIPMENT OPERATIONS, SANTA CLARA, CALIFORNIA

TWTA FINAL ASSEMBLY VZC-6961K2 SERIES [1]

SIZE D | CODE IDENT NO 59782 | 01000383 D

SCALE — | CLASS A | SHEET 1 OF 2

SUPERSEDES

01000383 D

ZONE	LTR	DESCRIPTION	ED		
		SEE SHEET 1			

NOTES:

1. IF THE LAST FOUR DIGITS OF THE MODEL NO. ARE NUMERICALLY CODED (ie 6961K2XXXX) THE MODEL IS NOT COVERED IN THIS DRAWING. SEE DRAWING 0100XXXX.
2. INSTALL OPTIONS ACCORDING TO TWTA MODEL NO. EXAMPLE, IF TWTA MODEL NO. IS 6961K2ACEG OPTIONS ARE A, C, E AND G. SEE RF SCHEMATIC DIAGRAM FOR ASSEMBLIES OF OPTIONS A B C D E E
3. STANDARD HARDWARE PER C110625, EXAMPLE (A2-18 (2 REQD))
4. APPLY A UNIFORM THIN COATING OF THERMAL COMPOUND ITEM 16 BETWEEN MOUNTING SURFACES OF ITEMS 2, 3, 4 AND 5
5. SELECT EITHER 50HZ OR 60HZ ELAPSED TIME INDICATOR ITEM 30 AS SPECIFIED ON CUSTOMER ORDER. CONNECT ITEM 30 TO TB1-3 AND TB1-2 USING ITEMS 57, 58 AND 59.
6. CONNECT TWT ITEM 2 TO CONNECTOR ITEM 11 WITH CONNECTOR SOCKETS ITEM 12 PER A01000419.
7. NAME PLATE DATA

   TWTA: (USE MODEL NO. SPECIFIED ON CUSTOMER ORDER)

   FREQ: 8.0-12.4 GHz

   GAIN: REFER TO K-SERIES RF PERFORMANCE SPEC (A0100081B) FOR GAIN OF EACH TWTA.
8. ———
9. IF OPTION G IS REQUIRED DELETE ITEM 32.
10. INSTALL REQUIRED OPTIONS IN THE APPROXIMATE PLACE AS SHOWN AND CONNECT RF COMPONENTS IN ORDER SHOWN ON R F SCHEMATIC DIAGRAM.

FRONT PANEL TABLE 1			
PART NO.	B OPTION	E OPTION	J OPTION
D01000417-12			
D01000417-15		X	
D01000417-13	X		
D01000417-17	X	X	
D01000417-00			X
D01000417-02		X	X
D01000417-03	X		X
D01000417-05	X	X	X

REAR PLATE TABLE 2		
	H OPTION	J OPTION
C01000418-00		
C01000418-01	X	
C01000418-03		X
C01000418-05	X	X

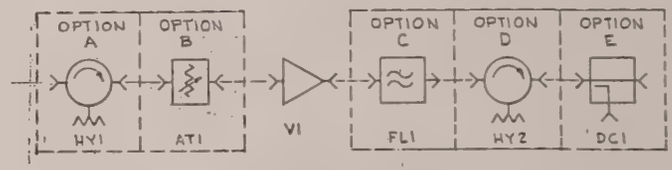

RF SCHEMATIC DIAGRAM
(ADD OPTIONS AS SPECIFIED IN ORDER SHOWN ABOVE)

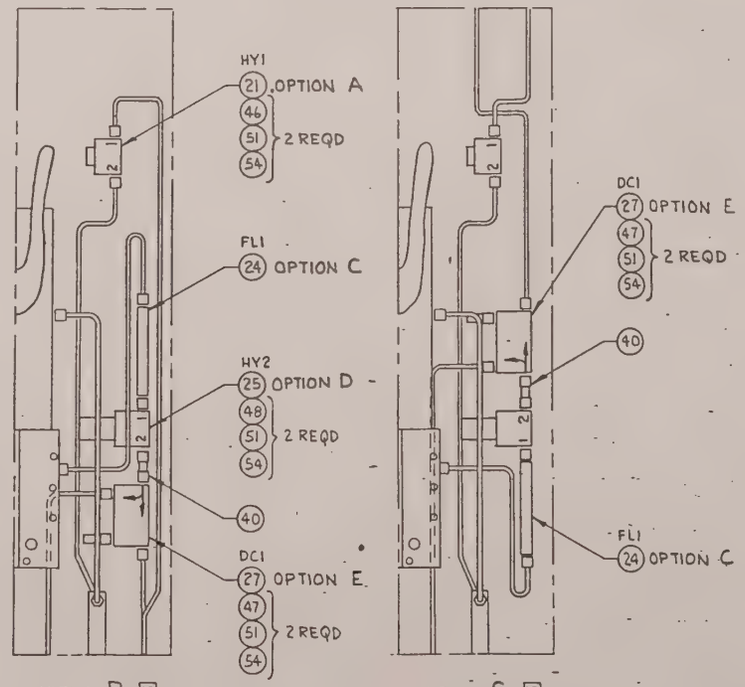

VIEW B [10]
SCALE: NONE
FRONT R F INPUT & OUTPUT, ALL RF OPTIONS SHOWN

VIEW C [10]
SCALE: NONE
REAR RF INPUT & OUTPUT ALL RF OPTIONS SHOWN

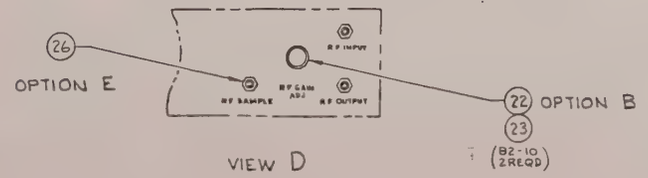

VIEW D
SCALE: NONE

ITEM	CODE IDENT	DESCRIPTION	IDENTIFYING NUMBER	QTY ALL MODELS	QTY WITH OPTION	OPTIONS [2]
67						
66						
65						
64						
63		SCREW, PAN HD, 6-32 x 7/16 LG.	12-222006-07	4		
62		LOCK WASHER, INTERNAL, #6	14-301106	4		
61						
60						
59		WIRE, TYPE EE, 24 AWG, BLACK	81-288700		AR	
58		SHRINK TUBING V8 DIA	88-488001		AR	H
57		TERMINAL, QUICK DISCONNECT	15-999902		2	
56		WASHER, LOCK, #6	14-202006	4		
55		WASHER, LOCK, #4	14-202004	8		
54		WASHER, LOCK, #2	14-202002		AR	A,E,D
53		WASHER, FLAT, #6	14-122006	4		
52		WASHER, FLAT, #4	14-122004	8		
51		WASHER, FLAT, #2	14-122002		AR	A,E,D
50		SCREW, SOC HD, 4-40 x 1¼ LG	12-312004-22	8		
49		SCREW, PAN HD, 6-32 x 13/4 LG	12-222006-26	4		
48		SCREW, PAN HD, 2-56 x 5/16 LG	12-162002-05		2	D
47		SCREW, PAN HD, 2-56 x 1¼ LG	12-162002-22		2	E
46		SCREW, PAN HD, 2-56 x 5/16 LG	12-162002-05		2	A

LIST OF MATERIALS

UNLESS OTHERWISE SPECIFIED DIMENSIONS ARE IN INCHES	CONTRACT NUMBER	varian — MICROWAVE EQUIPMENT OPERATIONS, SANTA CLARA, CALIFORNIA
DECIMALS 1PL ± .1 2PL ± .02	DR	TWTA FINAL ASSEMBLY VZC-6961K2 SERIES [1]
3PL ± .005 FRAC ± 1/64	CHK	
ANG ± 1° SURFACE FINISH √	APPD	
MATERIAL	APPD	SIZE D — CODE IDENT NO 59782 — 01000383
SPEC NO	DESIGN ACTIVITY APPROVAL	SCALE — SHEET 2 OF 2
FINISH	CUSTOMER APPROVAL	

SUPERSEDES

01000383 D

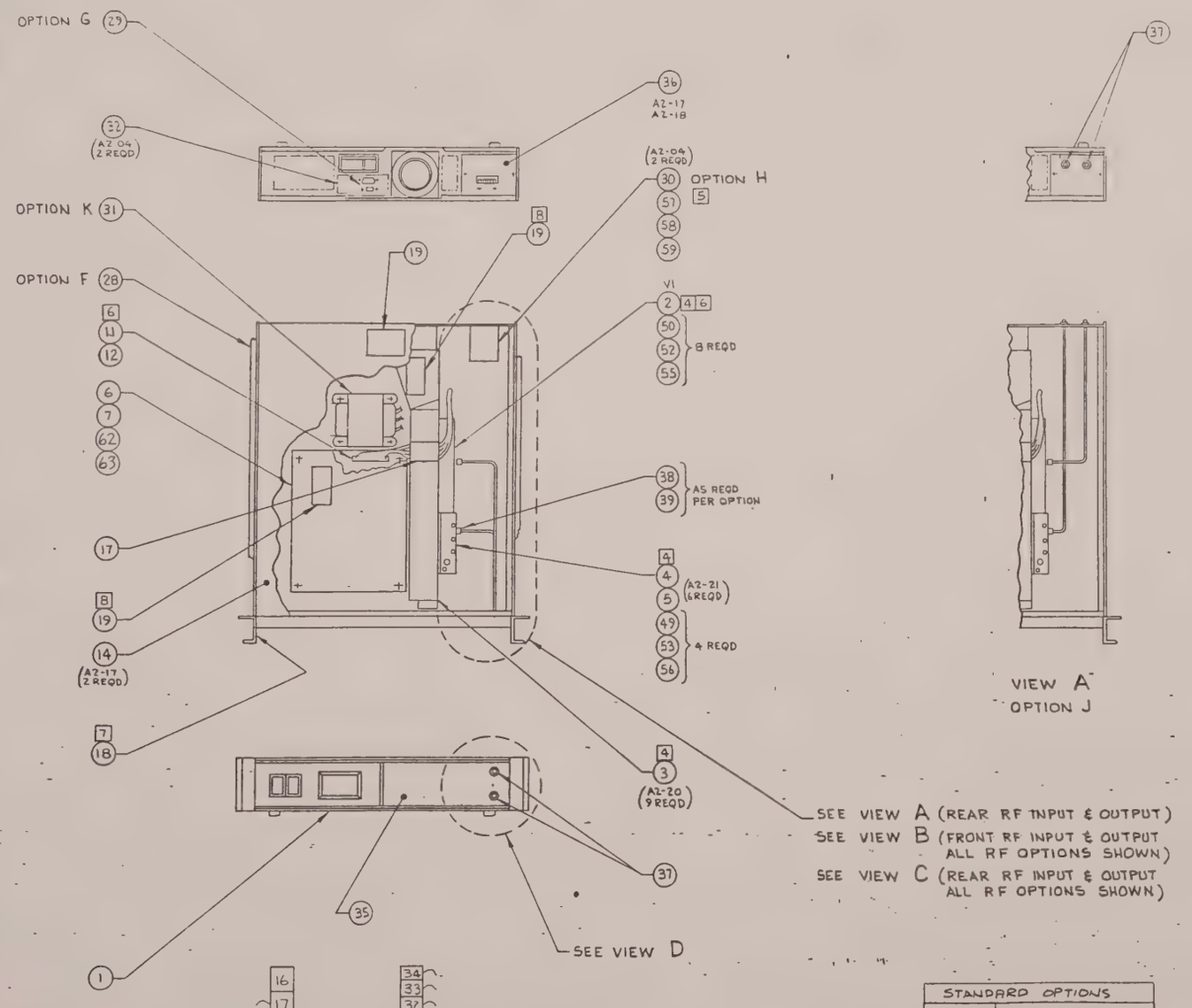

VIEW A
OPTION J

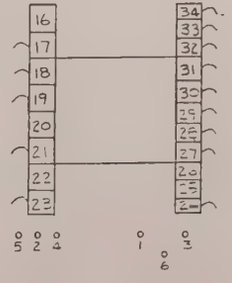

VIEW E
H.V TRANSFORMER AND PCB
SOLDER CAPACITOR (PN 41-299898)
FROM 1 TO 3 AND FROM 2 TO 4.

LIST OF MATERIALS CONTINUED ON SHEET 2

ITEM	DESCRIPTION	CODE IDENT	IDENTIFYING NUMBER	QTY ALL MODELS	QTY WITH OPTION	SEE VIEW	OPTIONS
45	OUTLINE		D135223-00	REF			
44	TWTA MODEL NUMBER BREAKDOWN		C01001000	REF			
43	SHIP KIT		01000420-00	1			
42							
41							
40	ADAPTER, SMA, PLUG TO PLUG		58-180102		1		D&E
39	CABLE, SEMI-RIGID, .141		82-299901	AR	AR		
38	CONNECTOR, PLUG, SMA		58-180100	2	AR		
37	CONNECTOR, BULKHEAD JACK, "N"		58-180190	2			
36	PLATE, REAR		SEE TABLE 2	1			H,J
35	PANEL, FRONT, RIGHT		SEE TABLE 1	1			B,E,J
34							
33	90° BEND CABLE W SMA		81-931001		1		B
32	COVER PLATE		B01000133-00	1 [9]			
31	230 OPTION KIT		B01000443-01		1		K
30	INDICATOR, ELAPSED TIME, 115V, 50HZ		76-789814		1 [5]		H
	INDICATOR, ELAPSED TIME, 115V, 60HZ		76-789815				
29	REMOTE CONTROL OPTION KIT		C01000444-00	1			G
28	SLIDE, ZERO #C-300-5-20		21-301120		1PR		F
27	DIRECTIONAL COUPLER		83-330015	1			E
26	CONNECTOR, BULKHEAD JACK, "N"		58-180190	1			
25	ISOLATOR, OUTPUT		A057648-07	1			D
24	HARMONIC FILTER		83-460013	1			C
23	KNOB		23-508002	1			B
22	ATTENUATOR, VARIABLE		83-439945	1			
21	ISOLATOR, INPUT		83-469857	1			A
20							
19	LABEL, DANGER		B112379-00	3			
18	LABEL		A01000500	1			
17	CHANNEL WIRING		A01000503	1			
16	THERMAL COMPOUND		88-298900	AR			
15							
14	COVER, MODIFIED		C135207-00	1			
13							
12	CONNECTOR SOCKET MOLEX #08-50-0106		51-407110	4			
11	CONNECTOR, 14 SOC, MOLEX #09-50-3141		51-411032	1			
10							
9	SSA DRIVER		01000818-03	1			[13] L
8							
7	STAND OFF		C135187-04	1			
6	COVER, HIGH VOLTAGE		C135186-00	1			
5	HEAT SPREADER		C135225-01	1			
4	HEAT SPREADER		C135225-00	1			
3	HEATSINK		D135202-00	1			
2	TWT		VTX-6186B1	1			
1	ASSY, POWER SUPPLY		E135216-00	1			

[2] LIST OF MATERIALS

STANDARD OPTIONS	
OPTION	DESCRIPTION
L	SSA DRIVER
A	INPUT ISOLATOR
B	INPUT ATTENUATOR
C	HARMONIC FILTER
D	OUTPUT ISOLATOR
E	OUTPUT SAMPLE PORT
F	CHASSIS SLIDES
G	REMOTE INTERFACE
H	ELAPSED TIME METER
J	REAR RF CONNECTOR
K	115/230 VAC PRIME PWR

NEXT ASSEMBLY | USED ON
APPLICATION

UNLESS OTHERWISE SPECIFIED DIMENSIONS ARE IN INCHES
DECIMALS: 1PL ± .1 2PL ± .02
3PL ± .005 FRAC ± 1/64
ANG ± 1° SURFACE FINISH ✓
MATERIAL
SPEC NO
FINISH

CONTRACT NUMBER
DR L. Ando 6/15/81
CHK [illegible] 6/[illegible]/81
APPD [illegible] 6/[illegible]/81
APPD [illegible] 6/21/81
DESIGN ACTIVITY APPROVAL
CUSTOMER APPROVAL

varian
MICROWAVE EQUIPMENT OPERATIONS
SANTA CLARA, CALIFORNIA

TWTA FINAL ASSEMBLY VZX-6981K1 SERIES [1]

SIZE D | CODE IDENT NO 57962 | 01000384 | E
SCALE — | SHEET 1 OF 2
SUPERSEDES

01000384

NOTES:

1. IF THE LAST FOUR DIGITS OF THE MODEL NO. ARE NUMERICALLY CODED (ie 6981K1XXXX) THE MODEL IS NOT COVERED IN THIS DRAWING. SEE DRAWING 0100XXXX.
2. INSTALL OPTIONS ACCORDING TO TWTA MODEL NO. EXAMPLE, IF TWTA MODEL NO. IS 6981K1ACEG OPTIONS ARE A, C, E AND G. SEE RF SCHEMATIC DIAGRAM FOR ASSEMBLIES OF OPTIONS A B C D & E
3. STANDARD HARDWARE PER C110625, EXAMPLE (A2-18 2 REQD)
4. APPLY A UNIFORM THIN COATING OF THERMAL COMPOUND ITEM 16 BETWEEN MOUNTING SURFACES OF ITEMS 2, 3, 4 AND 5
5. SELECT EITHER 50HZ OR 60HZ ELAPSED TIME INDICATOR ITEM 30 AS SPECIFIED ON CUSTOMER ORDER. CONNECT ITEM 30 TO TB1-3 AND TB1-2 USING ITEMS 57, 58 AND 59.
6. CONNECT TWT ITEM 2 TO CONNECTOR ITEM 11 WITH CONNECTOR SOCKETS ITEM 12 PER A01000419.
7. NAME PLATE DATA
   TWTA: (USE MODEL NO. SPECIFIED ON CUSTOMER ORDER)
   FREQ: 8.0-12.4 GHz
   GAIN: REFER TO K-SERIES RF PERFORMANCE SPEC. (A01000818) FOR GAIN OF EACH TWTA.
8. REMOVE PORTION OF LABEL THAT READS "EXPOSED WHEN COVER REMOVED".
9. IF OPTION G IS REQUIRED DELETE ITEM 32.
10. INSTALL REQUIRED OPTIONS IN THE APPROXIMATE PLACE AS SHOWN AND CONNECT RF COMPONENTS IN ORDER SHOWN ON RF SCHEMATIC DIAGRAM.
11. WIRING OF THERMAL PROTECTION: SOLDER YELLOW WIRE TO LUG ON TWT, CRIMP #6 LUG TO BLUE WIRE AND ATTACH WITH SCREW TO ITEM 3 (HEATSINK).
12. TWT VTU-6195C2 MAY BE SUBSTITUTED FOR THE VTX-6186B1. LABEL TUBE "REPLACE TUBE WITH VTX 6186B1 ONLY."
13. INSTALL SSA (U1) USING #4-40 HARDWARE PER WORKMANSHIP STD 87-800299, LOCATE IN APPROXIMATE POSITION SHOWN.
    CONNECT POWER TO SSA (U1) AS FOLLOWS:
    FROM: U1 (+12V) TO: A3TP4 WITH ITEM 59.
    FROM: U1 (GND) TO: A3TP1 WITH ITEM 55.

FRONT PANEL TABLE 1

PART NO	B OPTION	E OPTION	J OPTION
D01000417-12			
D01000417-15		X	
D01000417-13	X		
D01000417-17	X	X	
D01000417-00			X
D01000417-02		X	X
D01000417-03	X		X
D01000417-05	X	X	X

REAR PLATE TABLE 2

	H OPTION	J OPTION
C01000418-00		
C01000418-01	X	
C01000418-03		X
C01000418-05	X	X

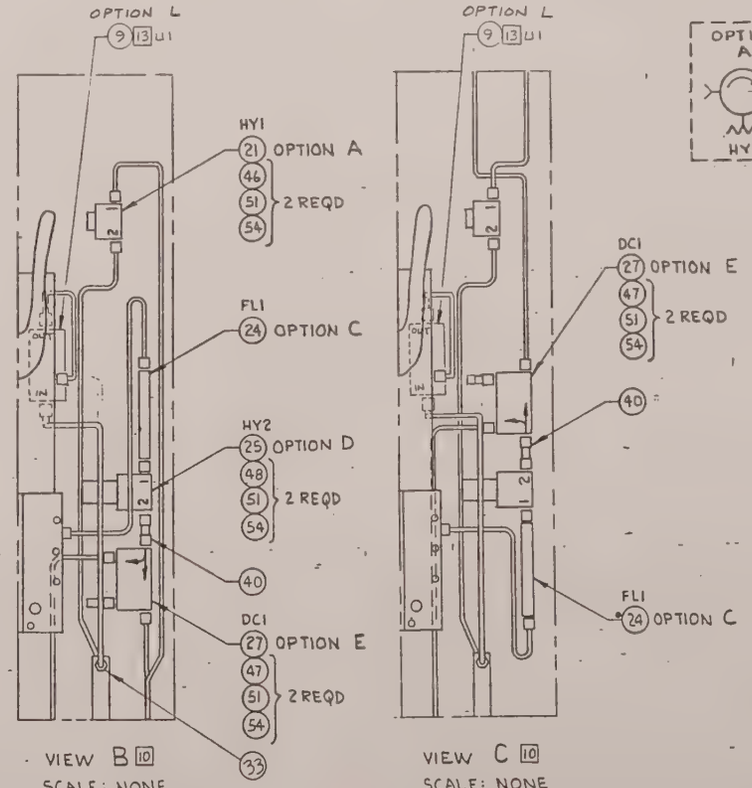

VIEW B [10]
SCALE: NONE
FRONT RF INPUT & OUTPUT
ALL RF OPTIONS SHOWN

VIEW C [10]
SCALE: NONE
REAR RF INPUT & OUTPUT
ALL RF OPTIONS SHOWN

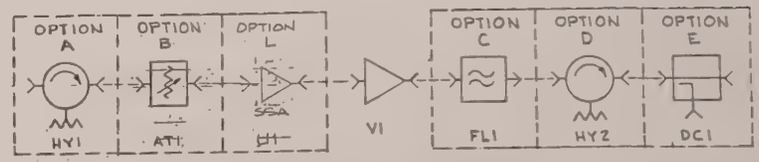

RF SCHEMATIC DIAGRAM
(ADD OPTIONS AS SPECIFIED IN ORDER SHOWN ABOVE)

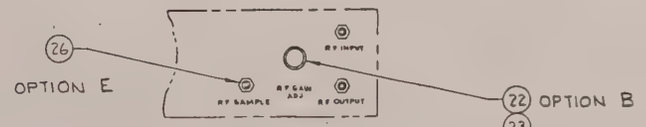

VIEW D
SCALE: NONE

ITEM	QTY ALL MODELS	QTY WITH OPTION	OPTIONS	IDENTIFYING NUMBER	DESCRIPTION	CODE IDENT
67						
66						
65						
64						
63	4			12-222006-07	SCREW, PAN HD, 6-32 x 3/16 LG.	
62	4			14-301106	LOCK WASHER, INTERNAL, #6	
61						
60						
59	AR			81-288700	WIRE, TYPE EE, 24 AWG, BLACK	
58	AR		H	88-488001	SHRINK TUBING 1/8 DIA	
57	2		H	15-999902	TERMINAL, QUICK DISCONNECT	
56	4			14-202006	WASHER, LOCK, #6	
55	8			14-202004	WASHER, LOCK, #4	
54	AR		A,E,D	14-202002	WASHER, LOCK, #2	
53	4			14-122006	WASHER, FLAT, #6	
52	8			14-122004	WASHER, FLAT, #4	
51	AR		A,E,D	14-122002	WASHER, FLAT, #2	
50	8			12-312004-22	SCREW, SOC HD, 4-40 x 1 1/4 LG	
49	4			12-222006-26	SCREW, PAN HD, 6-32 x 1 3/4 LG	
48	2		D	12-162002-05	SCREW, PAN HD, 2-56 x 5/16 LG	
47	2		E	12-162002-22	SCREW, PAN HD, 2-56 x 1 1/4 LG	
46	2		A	12-162002-05	SCREW, PAN HD, 2-56 x 5/16 LG	

[2] LIST OF MATERIALS

UNLESS OTHERWISE SPECIFIED DIMENSIONS ARE IN INCHES
DECIMALS: 1PL ± .1 2PL ± .02
3PL ± .005 FRAC ± 1/64
ANG ± 1° SURFACE FINISH ✓
MATERIAL
SPEC NO
FINISH

CONTRACT NUMBER
DR
CHK
APPD
APPD
DESIGN ACTIVITY APPROVAL
CUSTOMER APPROVAL

varian
MICROWAVE EQUIPMENT OPERATIONS
SANTA CLARA, CALIFORNIA

TWTA FINAL ASSEMBLY, VZX-6981K1 SERIES [1]

SIZE D | CODE IDENT NO 59782 | 01000384 | E
SCALE — | SHEET 2 OF 2
SUPERSEDES

01000384

ZONE	LTR	DESCRIPTION	ECO	DATE	APPROVED
	J	INC ECO	30345	10/17/88	LB

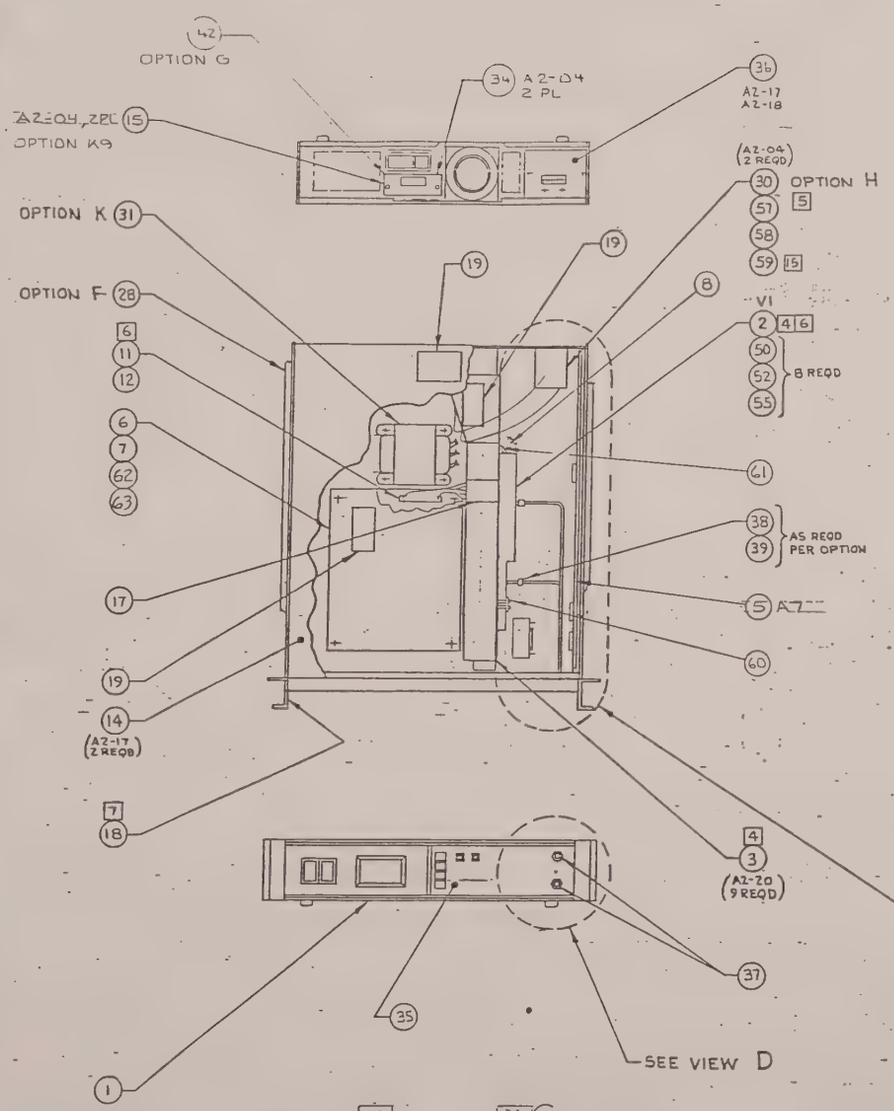

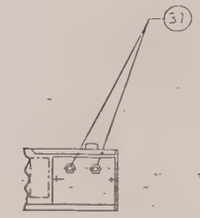

VIEW A
OPTION J

SEE VIEW A (REAR RF INPUT & OUTPUT)
SEE VIEW B (FRONT RF INPUT & OUTPUT ALL RF OPTION'S SHOWN)
SEE VIEW C (REAR RF INPUT & OUTPUT ALL RF OPTIONS SHOWN)

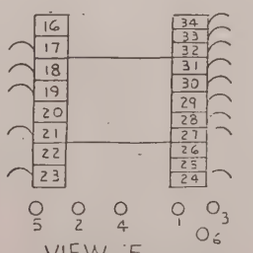

VIEW E
H.V. TRANSFORMER AND PCB.

SOLDER CAPACITOR (INCLUDED IN POWER SUPPLY) FROM 1 TO 3 AND FROM 2 TO 4.

STANDARD OPTIONS	
OPTION	DESCRIPTION
X	EQUALIZER
16	INTERNAL GPIB CONTROL
G	REMOTE INTERFACE
A	INPUT ISOLATOR
B	INPUT ATTENUATOR
C	HARMONIC FILTER
D	OUTPUT ISOLATOR
E	OUTPUT SAMPLE PORT
F	CHASSIS SLIDES
H	ELAPSED TIME METER
J	REAR RF CONNECTOR
K	230_VAC PRIME PWR
L	SSA DRIVER

LIST OF MATERIALS CONTINUED ON SHEET 2.

ITEM	CODE IDENT	DESCRIPTION	IDENTIFYING NUMBER	QTY ALL MODELS	QTY WITH OPTION	OPTIONS
45		OUTLINE	D135223-00	REF		
44		TWTA MODEL NUMBER BREAKDOWN	C01001000	REF		
43		SHIP KIT	01000420-00	1		
42		REMOTE CONTROL OPTION KIT	01000444-00	1		G
41		CONN, JACK SMA	58-180117	1		C
40		ADAPTER, SMA, PLUG TO PLUG	58-180102	1		D&E
39		CABLE, SEMI-RIGID, .141	82-299901	AR	AR	
38		CONNECTOR, PLUG, SMA	58-180100	2	AR	
37		CONNECTOR, BULKHEAD JACK, SMA	58-180190	2		
36		PLATE, REAR	SEE TABLE 2	1		H,J
35		PANEL, FRONT, RIGHT	SEE TABLE 1	1		B,E,J
34		COVER PLATE	01000133-00	1		
33		90° BEND CABLE WITH SMA	81-831001	1	2	B
32		VARISTOR	SEE TABLE 3	1	16	
31		230VAC OPTION KIT	B01000443-01	1		K
30		INDICATOR, ELAPSED TIME, 115V, 50HZ	76-789814	1	5	H
		INDICATOR, ELAPSED TIME, 115V, 60HZ	76-789815			
29		BRACKET, EQUALIZER	01009503-02	1		X
28		SLIDE, ZERO #C-300-5-20	21-301120	1PR		F
27		DIRECTIONAL COUPLER	83-330042	1		E
26		CONNECTOR, BULKHEAD JACK, SMA	58-180190	1		
25		ISOLATOR, OUTPUT	A057648-07	1		D
24		HARMONIC FILTER	83-460014	1		C
23		KNOB	23-508002	1		B
22		ATTENUATOR, VARIABLE	83-439946	1		
21		ISOLATOR, INPUT	83-469858	1		A
20		EQUALIZER	01009501-04	1		X
19		LABEL, DANGER	B112379-00	3		
18		LABEL	A01000500	1		
17		CHANNEL WIRE	A01008972	1		
16		THERMAL COMPOUND	88-298900	AR		
15		COVER PLATE	B01000133-02	1	16	
14		COVER, MODIFIED	C135207-00	1		
13		PLATE, TWT CLAMPING	01000593	1		
12		CONNECTOR SOCKET MOLEX #08-50-0106	51-407110	4		
11		CONNECTOR, 14 SOC, MOLEX #09-50-3141	51-411032	1		
10		GPIB POWER SUPPLY	TABLE 3	1	16	
9		THERMAL SWITCH	71-629899	1		
8		HARNESS, TWT	01007261	1		
7		STAND OFF	C135187-04	1		
6		COVER, HIGH VOLTAGE	C135186-00	1		
5		GPIB OPTION KIT	C01008962	1	16	
4		SSA DRIVER	01008818-03	1		L
3		HEATSINK	D135202-00	1		
2		TWT	VTM-6195R1	1		
1		ASSY, POWER SUPPLY	E135216-00	1	SEE VIEW E	

LIST OF MATERIALS

UNLESS OTHERWISE SPECIFIED DIMENSIONS ARE IN INCHES
DECIMALS: 1PL ± .1 2PL ± .02
3PL ± .005 FRAC ± 1/64
ANG ± 1° SURFACE FINISH ✓
MATERIAL
SPEC NO
FINISH
NEXT ASSEMBLY | USED ON
APPLICATION

CONTRACT NUMBER
DR 7-29-87
CHK J.A.S. 8-17-87
APPD 8/17/87
APPD 8/17/87
DESIGN ACTIVITY APPROVAL
CUSTOMER APPROVAL

varian
MICROWAVE EQUIPMENT OPERATIONS
SANTA CLARA, CALIFORNIA

TWTA FINAL ASSEMBLY
VZM-6991K3, VZM-6991K9
VZU-6991K1, VZU-6990K2
VZM-6990K1, VZM-6990K7
AND VZU-6991K7

SIZE	CODE IDENT NO		
D	59782	01000386	J

SCALE — | CLASS A | SHEET 1 OF 2

SUPERSEDES

SEE SHEET 1

NOTES:

1. IF THE LAST FOUR DIGITS OF THE MODEL NO. ARE NUMERICALLY CODED (ie 6991K9XXXX) THE MODEL IS NOT COVERED IN THIS DRAWING. SEE DRAWING 0100XXXX.
2. INSTALL OPTIONS ACCORDING TO TWTA MODEL NO. EXAMPLE, IF TWTA MODEL NO. IS 6991K9ACEG OPTIONS ARE A, C, E AND G. SEE RF SCHEMATIC DIAGRAM FOR ASSEMBLIES OF OPTIONS A B C D & E.
3. STANDARD HARDWARE PER C110625, EXAMPLE (A2-18 2 REQD)
4. APPLY A UNIFORM THIN COATING OF THERMAL COMPOUND ITEM 16 BETWEEN MOUNTING SURFACES OF ITEMS 2 & 3.
5. SELECT EITHER 50HZ OR 60HZ ELAPSED TIME INDICATOR ITEM 30 AS SPECIFIED ON CUSTOMER ORDER. CONNECT ITEM 30 TO TB1-3 AND TB1-2 USING ITEMS 57, 58 AND 59.
6. CONNECT TWT ITEM 2 TO CONNECTOR ITEM 11 WITH CONNECTOR SOCKETS ITEM 12 PER A01000419.
7. NAME PLATE DATA

   TWTA: (USE MODEL NO. SPECIFIED ON CUSTOMER ORDER)

   FREQ: 8.0 - 18 GHz

   GAIN: REFER TO K-SERIES RF PERFORMANCE SPEC. (A01000818) FOR GAIN OF EACH TWTA.
8. CONNECT POWER TO SSA AS FOLLOWS:
   FROM: SSA (12V) TO: A3TP4 WITH ITEM 59.
   FROM: SSA (GND) TO: A3TP1 WITH ITEM 56.
9. ———
10. INSTALL REQUIRED OPTIONS IN THE APPROXIMATE PLACE AS SHOWN AND CONNECT RF COMPONENTS IN ORDER SHOWN ON RF SCHEMATIC DIAGRAM.
11. OPTION Y ATTENUATOR AT2 FINAL VALUE IS DETERMINE IN TEST.
12. WIRING OF THERMAL PROTECTION:
    SOLDER YELLOW WIRE TO LUG ON TWT. CRIMP #6 LUG TO BLUE WIRE AND ATTACH WITH SCREW TO ITEM 3 (HEATSINK).
13. INSTALL EQUALIZER WITH LOCKING SCREWS ON THIS SURFACE.
14. IF GPIB OPTION (NOTE 16) OR OPTION G (REMOTE) IS NEEDED THEN DELETE ITEM 34.
15. CONNECT POWER TO ELAPSED TIME METER BY CONNECTING TOP WIRE TO TB1-2 AND BOTTOM WIRE TO TB1-3.
16. THE K7, K8 OR K9 IN THE MODEL NUMBER SIGNIFIES THAT INTERNAL GPIB CONTROL MUST BE INSTALLED USING THE PARTS LISTED.

TABLE 1 (FRONT PANEL)

ITEM NO.	PART NO.	OPTION COMBINATIONS & QUANTITIES FOR MODELS K7, K8, OR K9 (WITH INTERNAL GPIB CONTROL) NO B,E OR J	B	E	J	B,E	B,J	E,J	B,E,J
35	D01000417-33								1
	D01000417-34		1						
	D01000417-36			1					
	D01000417-41				1				
	D01000417-38					1			
	D01000417-24						1		
	D01000417-23							1	
	D01000417-26								1

ITEM	PART NO	FOR MODELS K1 K2 OR K3 (WITHOUT INTERNAL GPIB CONTROL) NO B,E OR J	B	E	J	B,E	B,J	E,J	B,E,J
35									
	D01000417-12	1							
	D01000417-13		1						
	D01000417-15			1					
	D01000417-00				1				
	D01000417-17					1			
	D01000417-03						1		
	D01000417-02							1	
	D01000417-05								1

TABLE 2 (REAR PLATE)

PART NO	OPTION COMBINATIONS & QUANTITIES FOR MODELS K7, K8 OR K9 (WITH INTERNAL GPIB CONTROL) NO. H OR J	H	J	H,J	ITEM NO.
C01000418-11	1				36
C01000418-12		1			36
C01000418-14			1		36
C01000418-16				1	36

PART NO	FOR MODELS K1, K2 OR K3 (WITHOUT INTERNAL GPIB CONTROL)				ITEM
C01000418-00	1				36
C01000418-01		1			36
C01000418-03			1		36
C01000418-05				1	36

TABLE 3 GPIB POWER SUPPLY FOR MODELS K7, K8, OR K9 WITH INTERNAL GPIB CONTROL ONLY

ITEM NO.	PART NO.	OPTION COMBINATIONS AND QUANTITIES NO K	K
10	78-599919-00	1	
10	78-573196-00		1
32	66-29900-00		1
32	55-400009-00	1	

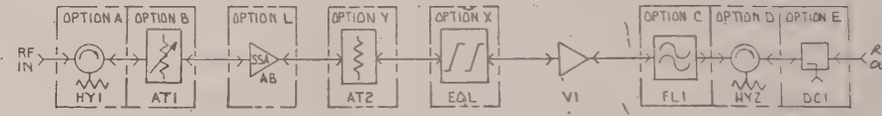

RF SCHEMATIC DIAGRAM
(ADD OPTIONS AS SPECIFIED IN ORDER SHOWN ABOVE)

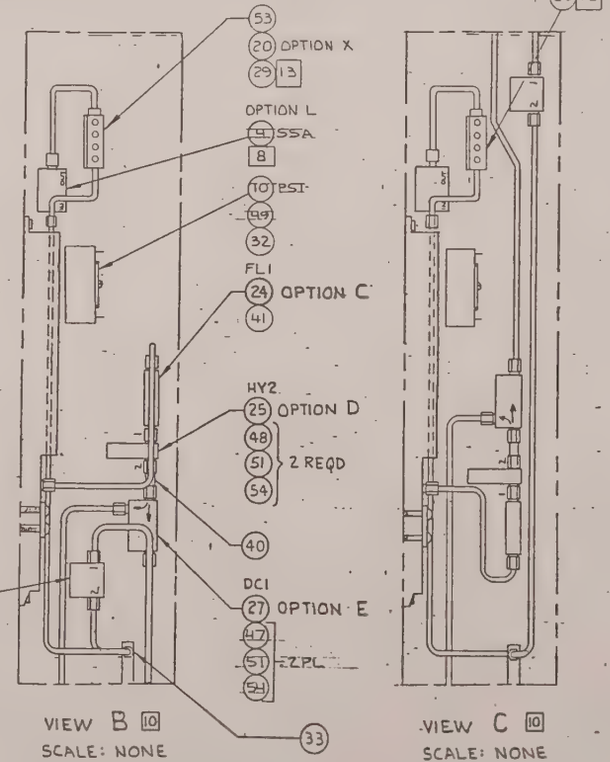

VIEW B [10]
SCALE: NONE
FRONT RF INPUT & OUTPUT
ALL RF OPTIONS SHOWN

VIEW C [10]
SCALE: NONE
REAR RF INPUT & OUTPUT
ALL RF OPTIONS SHOWN

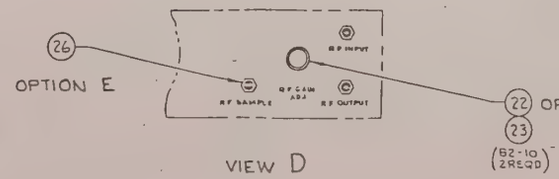

VIEW D
SCALE: NONE

[11]						
Y	1	—	83-439883	ATTENUATOR, FIXED, 3 dB	68	
					67	
					66	
		REF	01000818	RF PERFORMANCE SPEC.	65	
		4	14-317110	EXTERNAL WASHER, #10	64	
		4	12-222 006-07	SCREW, PAN HD, 6-32 x 7/16 LG	63	
		4	14-301 106	LOCK WASHER, INTERNAL, #6	62	
		1	12-752008-06	SCREW, HEX HD, #8-32 x 3/8 LG	61	
		4	12-222060-26	SCREW, PAN HD #10-32 x 1 3/4 LG	60	
H, L	AR		81-288700	WIRE, TYPE EE, 24 AWG, BLACK	59	
H	AR		88-488001	SHRINK TUBING .V8 DIA	58	
					57	
L	A/R		81-288 830	WIRE, 20 AWG, EE, (GREEN)	56	
		8	14-202004	WASHER, LOCK, #4	55	
A,D	AR		14-202002	WASHER, LOCK, #2	54	
X	2	—	58-180100	SMA PLUG	53	
		8	14-122004	WASHER, FLAT, #4	52	
A,D	AR		14-122002	WASHER, FLAT, #2	51	
		8	12-312004-22	SCREW, SOC HD, 4-40 x 1 1/4 LG	50	
[16]	—	1	01008938	BRACKET, PWR SUPPLY MTG	49	
D	2		12-162002-05	SCREW, PAN HD, 2-56 x 5/16 LG	48	
E	2		12-162002-22	SCREW, PAN HD, 2-56 x 1 1/4 LG	47	
A	2		12-162002-05	SCREW, PAN HD, 2-56 x 5/16 LG	46	
[2] OPTIONS	QTY WITH OPTION	QTY ALL MODELS	IDENTIFYING NUMBER	DESCRIPTION	CODE IDENT	ITEM

LIST OF MATERIALS

UNLESS OTHERWISE SPECIFIED DIMENSIONS ARE IN INCHES	CONTRACT NUMBER	varian — MICROWAVE EQUIPMENT OPERATIONS, SANTA CLARA, CALIFORNIA
DECIMALS. 1PL ± .1 2PL ± .02	OR	TWTA FINAL ASSEMBLY VZM-6991K3, VZM-6991K9, VZU-6991K1, VZU-6990K2, VZM-6990K1, VZM-6990K7, AND VZU-6991K7
3PL ± .005 FRAC ± 1/64	CHK	
ANG ± 1° SURFACE FINISH ✓	APP'D	
MATERIAL	APP'D	
SPEC NO.	DESIGN ACTIVITY APPROVAL	SIZE D — CODE IDENT NO. 59782 — 01000386 — J
FINISH	CUSTOMER APPROVAL	SCALE — CLASS A — SHEET 2 OF 2

SUPERSEDES

01000386

ZONE	LTR	DESCRIPTION	ECO	DATE	APPD
	A	IN E.C.O.	15888	4-15-82	
	B	ING E.C.O.	16527	5-20-82	

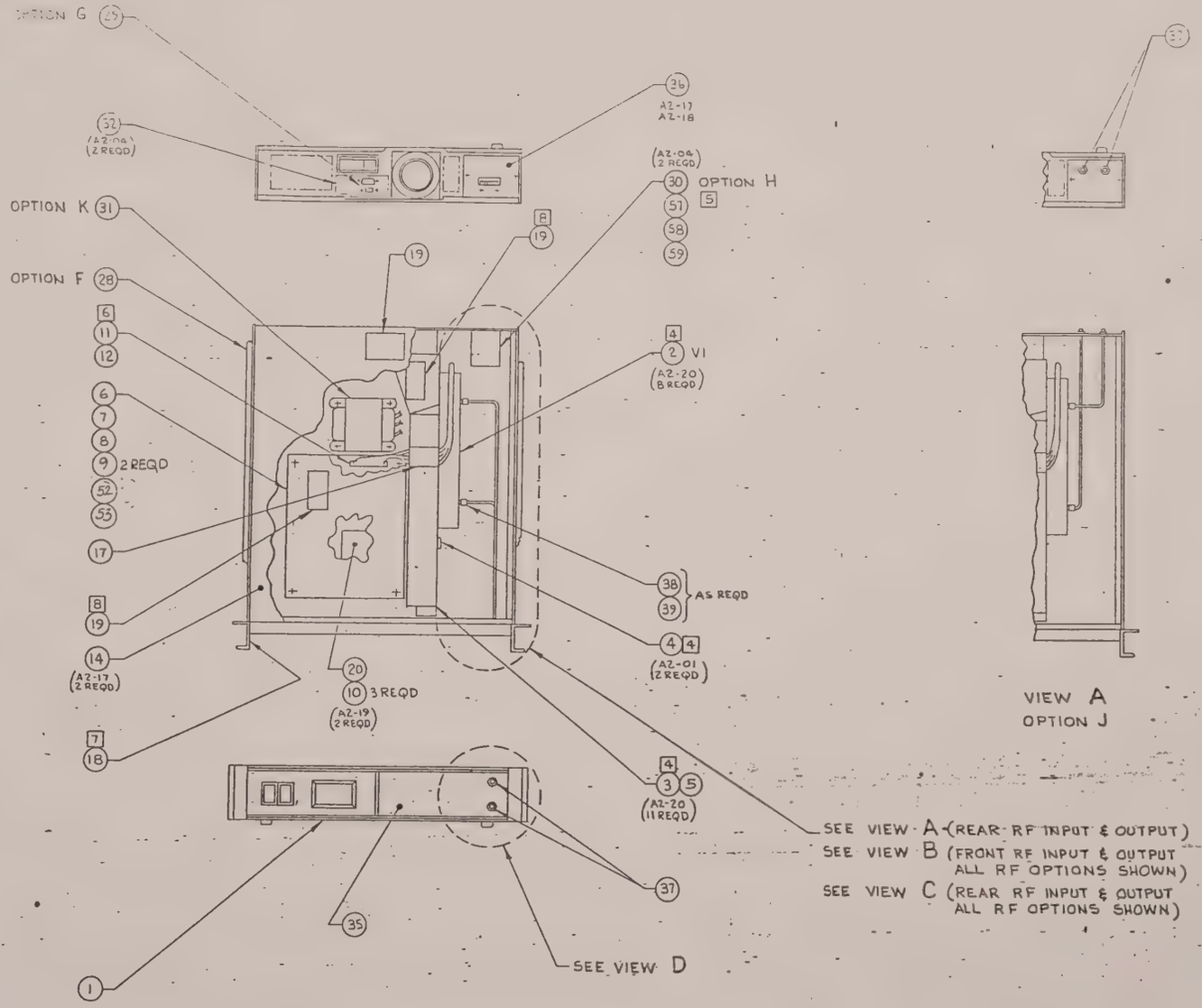

VIEW A
OPTION J

LIST OF MATERIALS CONTINUED ON SHEET 2

		QTY WITH OPTION	QTY ALL MODELS	IDENTIFYING NUMBER	DESCRIPTION	CODE IDENT	ITEM
		REF		D135223-00	OUTLINE		45
		REF		C01001000	TWTA MODEL NUMBER BREAKDOWN		44
			1	SEE TABLE 3	SHIP KIT		43
							42
							41
D&E				58-180102	ADAPTER, SMA, PLUG TO PLUG		40
	AR	AR		82-299901	CABLE, SEMI-RIGID, .141		39
	AR	2		58-180100	CONNECTOR, PLUG, SMA		38
		2		58-180105	CONNECTOR, BULKHEAD JACK, SMA		37
H,J		1		SEE TABLE 2	PLATE, REAR		36
B,E,J		1		SEE TABLE 1	PANEL, FRONT, RIGHT		35
							34
							33
		1 [9]		B01000133-00	COVER PLATE		32
K	1			B01000443-00	115/230 OPTION KIT		31
H	1 [5]			76-789814	INDICATOR, ELAPSED TIME, 115V, 50HZ		30
				76-789815	INDICATOR, ELAPSED TIME, 115V, 60HZ		
G	1			C01000444-00	REMOTE CONTROL OPTION KIT		29
F	1PR			21-301120	SLIDE, ZERO #C-300-5-20		28
E	1			83-330042	DIRECTIONAL COUPLER		27
	1			58-180105	CONNECTOR, BULKHEAD JACK, SMA		26
D	1			A057648-07	ISOLATOR, OUTPUT		25
C	1			83-460014	HARMONIC FILTER		24
B	1			23-508002	KNOB		23
	1			83-439946	ATTENUATOR, VARIABLE		22
A	1			83-469859	ISOLATOR, INPUT		21
			1	D135195-00	ASSY, GRID SUPPLY/REGULATOR		20
			3	B112379-00	LABEL, DANGER		19
			1	01000500	LABEL		18
				A01000503	CHANNEL, WIRING		17
			AR	88-298900	THERMAL COMPOUND		16
							15
			1	C135207-00	COVER, MODIFIED		14
							13
			5	51-907110	CONNECTOR SOCKET MOLEX #08-50-0106		12
			1	51-411032	CONNECTOR, 14 SOC, MOLEX #09-50-3141		11
			3	C135187-02	STAND-OFF		10
			2	C135187-04	STAND-OFF		9
			1	C135187-03	STAND-OFF		8
			1	C135187-00	STAND-OFF		7
			1	C135186-00	COVER, HIGH VOLTAGE		6
			1	A01000948	BRACKET		5
			1	71-629971	SWITCH, THERMOSTATIC		4
			1	01000528	TWT MOUNTING BRACKET		3
			1	VTU 6098A1	TWT		2
			1	01000527	ASSY, POWER SUPPLY		1

[2] OPTIONS

LIST OF MATERIALS R793

STANDARD OPTIONS	
OPTION	DESCRIPTION
A	INPUT ISOLATOR
B	INPUT ATTENUATOR
C	HARMONIC FILTER
D	OUTPUT ISOLATOR
E	OUTPUT SAMPLE PORT
F	CHASSIS SLIDES
G	REMOTE INTERFACE
H	ELAPSED TIME METER
J	REAR RF CONNECTOR
[11] K	115/230 VAC PRIME PWR

NEXT ASSEMBLY | USED ON
APPLICATION

UNLESS OTHERWISE SPECIFIED DIMENSIONS ARE IN INCHES
DECIMALS: 1PL ± .1 2PL ± .02
3PL ± .015 FRAC ± 1/64
ANG ± 1° SURFACE FINISH √
MATERIAL
SPEC NO
FINISH

CONTRACT NUMBER
DR R. JIMENEZ 8-27-81
CHK [signature] 8-27-81
APPD [signature] 9/1/81
APPD [signature] 11/11/81
DESIGN ACTIVITY APPROVAL
CUSTOMER APPROVAL

varian
MICROWAVE EQUIPMENT OPERATIONS
SANTA CLARA, CALIFORNIA

TWTA
FINAL ASSEMBLY
VZU-6998K1 SERIES [1]

SIZE	CODE IDENT NO		
D	59782	01000525	B

SCALE — SHEET 1 OF 2

SUPERSEDES

(01000525 D)

NOTES:

1. IF THE LAST FOUR DIGITS OF THE MODEL NO. ARE NUMERICALLY CODED (ie 6998K11234) THE MODEL IS NOT COVERED IN THIS DRAWING. SEE DRAWING 01001234.
2. INSTALL OPTIONS ACCORDING TO TWTA MODEL NO. EXAMPLE, IF TWTA MODEL NO. IS 6998K1ACEG OPTIONS ARE A, C, E AND G SEE RF SCHEMATIC DIAGRAM FOR ASSEMBLIES OF OPTIONS A B C D & E
3. STANDARD HARDWARE PER C110625, EXAMPLE (A2-18 2 REQD)
4. APPLY A UNIFORM THIN COATING OF THERMAL COMPOUND ITEM 16 BETWEEN MOUNTING SURFACES OF ITEMS 2, 3 AND 4.
5. SELECT EITHER 50HZ OR 60HZ ELAPSED TIME INDICATOR ITEM 30 AS SPECIFIED ON CUSTOMER ORDER. CONNECT ITEM 30 TO TB1-3 AND TB1-2 USING ITEMS 57, 58 AND 59.
6. CONNECT TWT ITEM 2 TO CONNECTOR ITEM 11 WITH CONNECTOR SOCKETS ITEM 12 PER A01000419.
7. NAME PLATE DATA

   TWTA: (USE MODEL NO. SPECIFIED ON CUSTOMER ORDER)

   FREQ: 12.4 - 18.0 GHz

   GAIN: REFER TO K-SERIES RF PERFORMANCE SPEC. (A01000818) FOR GAIN OF EACH TWTA.
8. REMOVE PORTION OF LABEL THAT READS "EXPOSED WHEN COVER REMOVED".
9. IF OPTION G IS REQUIRED DELETE ITEM 32.
10. INSTALL REQUIRED OPTIONS IN THE APPROXIMATE PLACE AS SHOWN AND CONNECT RF COMPONENTS IN ORDER SHOWN ON RF SCHEMATIC DIAGRAM.
11. SEE SHIPKIT FOR CUSTOMER INTERFACE OF PRIME POWER.

FRONT PANEL TABLE 1			
PART NO.	B OPTION	E OPTION	J OPTION
D01000417-06			
D01000417-06		X	
D01000417-07	X		
D01000417-10	X	X	
D01000417-00			X
D01000417-01		X	X
D01000417-03	X		X
D01000417-04	X	X	X

REAR PLATE TABLE 2		
PART NO.	H OPTION	J OPTION
C01000418-00		
C01000418-01	X	
C01000418-02		X
C01000418-04	X	X

SHIP KIT TABLE 3		
PART NO.	G OPTION	K OPTION
B01000420-00		
B01000420-01		X
B01000420-02	X	
B01000420-03	X	X

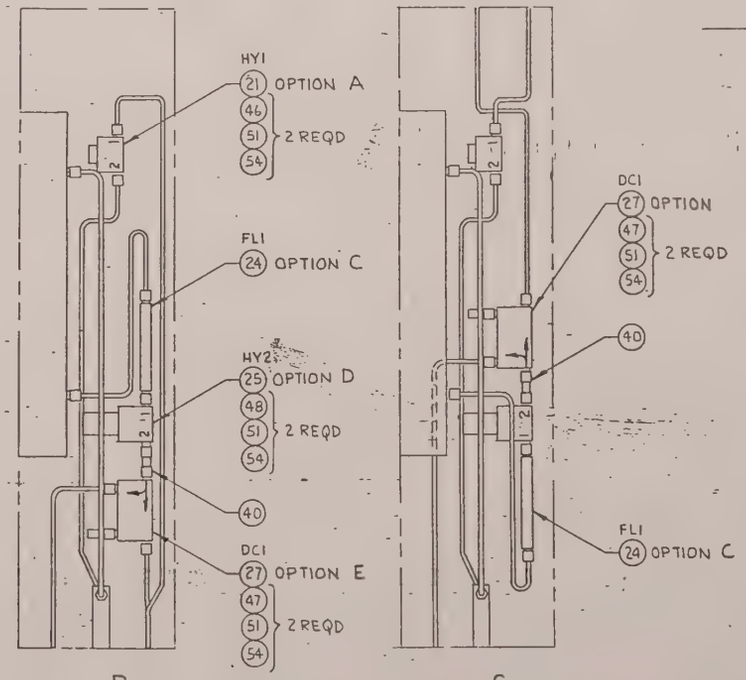

VIEW B
SCALE: NONE
FRONT RF INPUT & OUTPUT
ALL RF OPTIONS SHOWN

VIEW C
SCALE: NONE
REAR RF INPUT & OUTPUT
ALL RF OPTIONS SHOWN

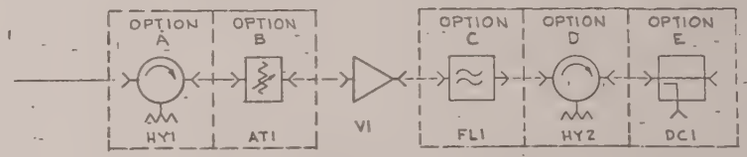

RF SCHEMATIC DIAGRAM
(ADD OPTIONS AS SPECIFIED IN ORDER SHOWN ABOVE)

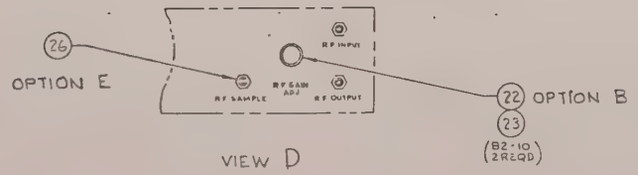

VIEW D
SCALE: NONE

ITEM	CODE IDENT	DESCRIPTION	IDENTIFYING NUMBER	QTY ALL MODELS	QTY WITH OPTION	OPTIONS
67						
66						
65						
64						
63						
62						
61						
60						
59		WIRE, TYPE EE, 24 AWG, BLACK	81-288700		AR	H
58		SHRINK TUBING 1/8 DIA	88-488001		AR	H
57		TERMINAL, QUICK DISCONNECT	15-999902		2	H
56						
55						
54		WASHER, LOCK, #2	14-202002		AR	A,E,D
53		PAN HD SCREW #6	12-222006-07	4		
52		INT. LOCK WASHER	14-301106	4		
51		WASHER, FLAT, #2	14-122002		AR	A,E,D
50						
49						
48		SCREW, PAN HD, 2-56 x 5/16 LG	12-162002-05		2	D
47		SCREW, PAN HD, 2-56 x 1 1/4 LG	12-162002-22		2	E
46		SCREW, PAN HD, 2-56 x 5/16 LG	12-162002-05		2	A

2 OPTIONS — LIST OF MATERIALS

REVISIONS				
ZONE	LTR	DESCRIPTION	ECO	DATE / APPROVED

UNLESS OTHERWISE SPECIFIED DIMENSIONS ARE IN INCHES
DECIMALS 1PL ± 1 2PLS ± 02
3PL ± 005 FRAC ± 1/64
ANG ± 1° SURFACE FINISH √
MATERIAL
SPEC NO
FINISH

CONTRACT NUMBER
DR
CHK
APPD
APPD
DESIGN ACTIVITY APPROVAL
CUSTOMER APPROVAL

varian — MICROWAVE EQUIPMENT OPERATIONS, SANTA CLARA, CALIFORNIA

TWTA FINAL ASSEMBLY
VZU6998K1 SERIES 1

SIZE D | CODE IDENT NO 59762 | 01000525 | B
SCALE — | SHEET 2 OF 2

SUPERSEDES

01000525

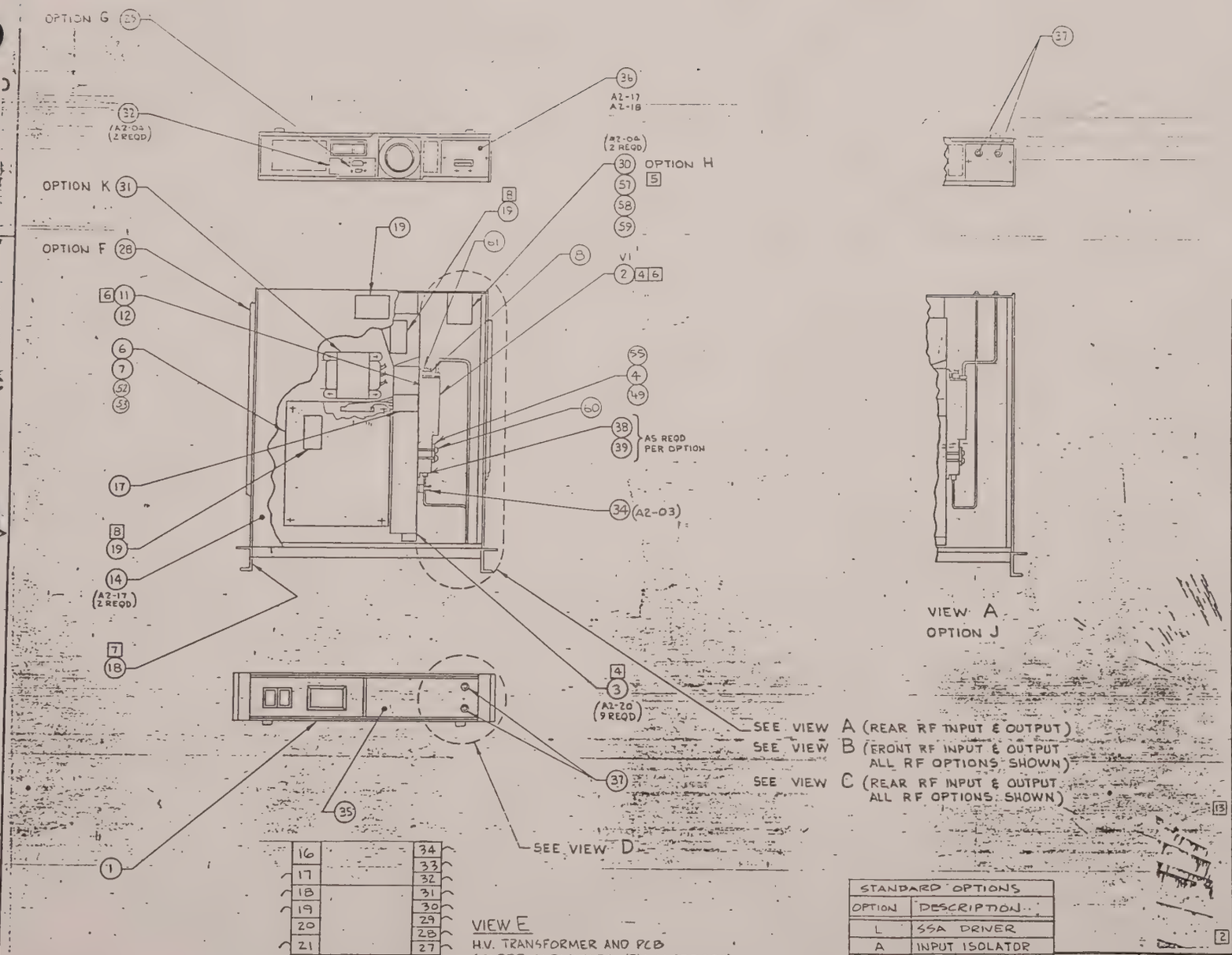

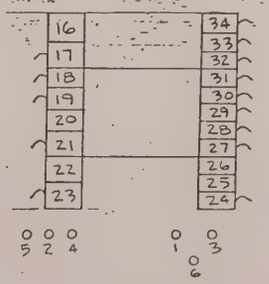

VIEW E

H.V. TRANSFORMER AND PCB SOLDER CAPACITORS (PN 41-299898) FROM 1 TO 3 AND FROM 2 TO 4.

VIEW A
OPTION J

STANDARD OPTIONS	
OPTION	DESCRIPTION
L	SSA DRIVER
A	INPUT ISOLATOR
B	INPUT ATTENUATOR
C	HARMONIC FILTER
D	OUTPUT ISOLATOR
E	OUTPUT SAMPLE PORT
F	CHASSIS SLIDES
G	REMOTE INTERFACE
H	ELAPSED TIME METER
J	REAR RF CONNECTOR
K	115/230 VAC PRIME PWR

LIST OF MATERIALS CONTINUED ON SHEET 2

OPTIONS	QTY WITH OPTION	QTY ALL MODELS	IDENTIFYING NUMBER	DESCRIPTION	CODE IDENT	ITEM
		REF	D135223-00	OUTLINE		45
		REF	C01001000	TWTA MODEL NUMBER BREAKDOWN		44
		1	B01000420-00	SHIPKIT		43
						42
						41
D&E	1		58-180102	ADAPTER, SMA, PLUG TO PLUG		40
	AR	AR	82-299901	CABLE, SEMI-RIGID, .141		39
	AR	2	58-180100	CONNECTOR, PLUG, SMA		38
		2	58-180190	CONNECTOR, BULKHEAD JACK, "N"		37
H,J		1	SEE TABLE 2	PLATE, REAR		36
B,E,J		1	SEE TABLE 1	PANEL, FRONT, RIGHT		35
		1	71-629839	THERMAL SWITCH		34
B	1		B1-831001	90° BEND CABLE W SMA		33
		1 [9]	B01000133-00	COVER PLATE		32
K	1		B01000443-01	230 OPTION KIT		31
H	1 [5]		76-789814	INDICATOR, ELAPSED TIME, 115V, 50HZ		30
			76-789815	INDICATOR, ELAPSED TIME, 115V, 60HZ		
G	1		C01000444-00	REMOTE CONTROL OPTION KIT		29
F	1PR		21-301120	SLIDE, ZERO #C-300-S-20		28
E	1		83-330016	DIRECTIONAL COUPLER		27
	1		58-180190	CONNECTOR, BULKHEAD JACK, "N"		26
D	1		A057648-07	ISOLATOR, OUTPUT		25
C	1		83-460014	HARMONIC FILTER		24
B	1		23-508002	KNOB		23
	1		83-439947	ATTENUATOR, VARIABLE		22
A	1		83-469858	ISOLATOR, INPUT		21
						20
		3	B112379-00	LABEL, DANGER		19
		1	01000500	LABEL		18
			01000503	CHANNEL, WIRING		17
		AR	88-298900	THERMAL COMPOUND		16
						15
		1	C135207-00	COVER, MODIFIED		14
						13
		4	51-407410	CONNECTOR, SOCKET		12
		1	51-411032	CONNECTOR, 14 SOC		11
						10
L	1		01008818-03	SSA DRIVER		9
		1	01007261-00	HARNESS, TWT		8
		1	C135187-04	STAND OFF		7
		1	C135186-00	COVER, HIGH VOLTAGE		6
						5
		1	01000593	PLATE, TWT CLAMPING		4
		1	D135202	HEATSINK		3
		1	VTM-6195R1	TWT		2
	REF VIEW E	1	E135216-00	ASSY, POWER SUPPLY		1

LIST OF MATERIALS

NEXT ASSEMBLY	USED ON		
APPLICATION		SPEC NO	
	VZM-6990K1	FINISH	

UNLESS OTHERWISE SPECIFIED DIMENSIONS ARE IN INCHES
DECIMALS: 1PL ± .1 2PL ± .02
3PL ± .005 FRAC ± 1/64
ANG ± 1° SURFACE FINISH ✓
MATERIAL

CONTRACT NUMBER

DR	Ryburn	21SEP81
CHK	JL	9-30-81
APPD	R. Ellis	9/30/81
APPD	June Orwig	11/11/81

DESIGN ACTIVITY APPROVAL
CUSTOMER APPROVAL

varian — MICROWAVE EQUIPMENT DIVISION, SANTA CLARA, CALIFORNIA

TWTA FINAL ASSEMBLY VZM-6990K1 SERIES [1]

SIZE	CODE IDENT NO		
D	59782	01000592	K

SCALE — CLASS A SHEET 1 OF 2

SUPERSEDES

NOTES:

1. IF THE LAST FOUR DIGITS OF THE MODEL NO. ARE NUMERICALLY CODED (ie 6990K1XXXX) THE MODEL IS NOT COVERED IN THIS DRAWING. SEE DRAWING 01000XXXX.
2. INSTALL OPTIONS ACCORDING TO TWTA MODEL NO. EXAMPLE, IF TWTA MODEL NO. IS 6990K1ACEG OPTIONS ARE A, C, E AND G. SEE RF SCHEMATIC DIAGRAM FOR ASSEMBLIES OF OPTIONS A B C D & E
3. STANDARD HARDWARE PER C110625, EXAMPLE (A2-118 (2 REQD))
4. APPLY A UNIFORM THIN COATING OF THERMAL COMPOUND ITEM 16 BETWEEN MOUNTING SURFACES OF ITEMS 2 & 3.
5. SELECT EITHER 50HZ OR 60HZ ELAPSED TIME INDICATOR ITEM 30 AS SPECIFIED ON CUSTOMER ORDER. CONNECT ITEM 30 TO TB1-3 AND TB1-2 USING ITEMS 57, 58 AND 59.
6. CONNECT TWT ITEM 2 TO CONNECTOR ITEM 11 WITH CONNECTOR SOCKETS ITEM 12 PER A 01000643.
7. NAME PLATE DATA
   TWTA: (USE MODEL NO. SPECIFIED ON CUSTOMER ORDER) (80-100)
   FREQ: 8.0 - 18.0 GHz
   GAIN: REFER TO K-SERIES RF PERFORMANCE SPEC: (A 01000818) FOR GAIN OF EACH TWTA
8. REMOVE PORTION OF LABEL THAT READS "EXPOSED WHEN COVER REMOVED".
9. IF OPTION G IS REQUIRED DELETE ITEM 32.
10. INSTALL REQUIRED OPTIONS IN THE APPROXIMATE PLACE AS SHOWN AND CONNECT RF COMPONENTS IN ORDER SHOWN ON RF SCHEMATIC DIAGRAM.
11. SEE SHIP KIT FOR CUSTOMER INTERFACE OF PRIME POWER.
12. THE TWT VTM-6096R1 MAY BE SUBSTITUTED FOR THE VTM-6095R1. ISSUE ITEM 49 WITH THE VTM-6096R1 ONLY.
13. INSTALL SSA (U1) USING #4-40 HARDWARE PER WORKMANSHIP STD. 87-800299. LOCATE IN APPROXIMATE POSITION SHOWN.
    CONNECT POWER TO SSA (U1) AS FOLLOWS —
    FROM: J1 (+12V) TO: A3TP4 WITH ITEM 59.
    FROM: J1 (GND) TO: A3TP1 WITH ITEM 55.

FRONT PANEL TABLE 1			
PART NO.	B OPTION	E OPTION	J OPTION
D01000417-12			
D01000417-15		X	
D01000417-13	X		
D01000417-17	X	X	
D01000417-00			X
D01000417-02		X	X
D01000417-03	X		X
D01000417-05	X	X	X

REAR PLATE TABLE 2		
	H OPTION	J OPTION
C01000418-00		
C01000418-01	X	
C01000418-03		X
C01000418-05	X	X

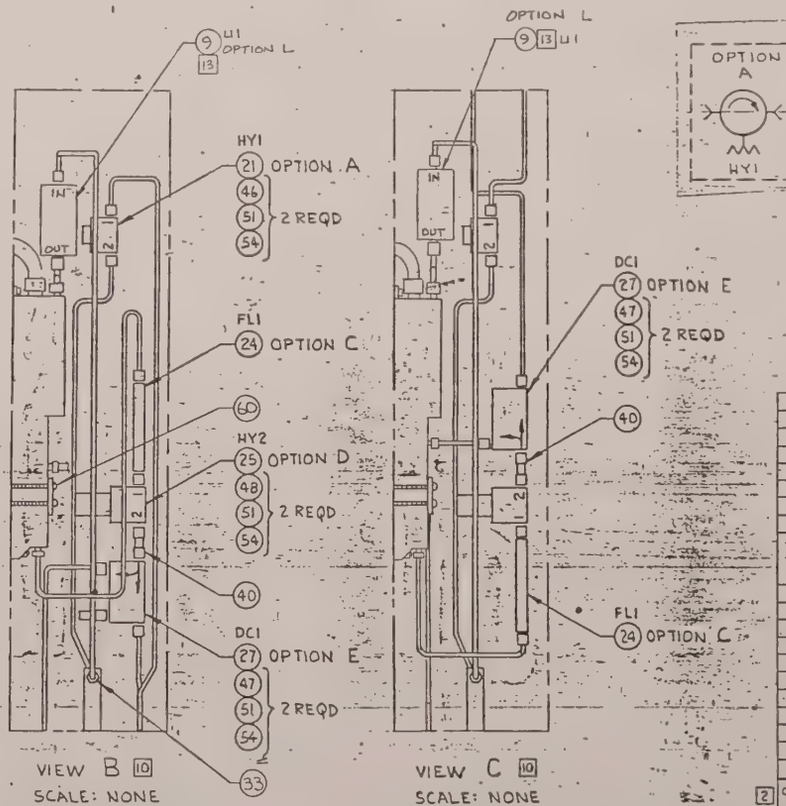

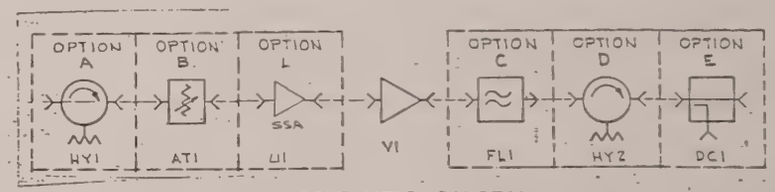

RF SCHEMATIC DIAGRAM
(ADD OPTIONS AS SPECIFIED IN ORDER SHOWN ABOVE)

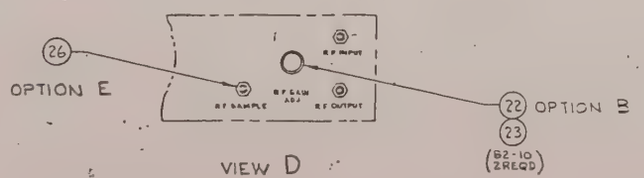

ITEM	CODE IDENT	DESCRIPTION	IDENTIFYING NUMBER	QTY ALL MODELS	QTY WITH OPTION	OPTIONS
67						
66						
65						
64						
63						
62						
61		SCREW, HEX HD, #8-32 x 3/8 LG	12-752008-06	1		
60		SCREW, PAN HD #10-32 x 13/16 LG	12-222 060-26	4		
55		WIRE, TYPE ES, 24 AWG, BLACK	81-288700-		AR	
58		SHRINK TUBING V8 DIA	88-488001		AR	H
57		TERMINAL, QUICK DISCONNECT	15-999902		2	
56						
55		EXTERNAL WASHER #10	14-317110	4		
54		WASHER, LOCK, #2	14-202002		AR	A,E,D
53		PAN HD SCREW #6	12-222006-07	4		
52		INTERNAL LOCK WASHER, #6	14-301106	4		
51		WASHER, FLAT, #2	14-122002		AR	A,E,D
50						
49		SCREW, PAN HD, 10-32 x 2 1/4 LG	12-222060-32	4	12	
48		SCREW, PAN HD, 2-56 x 5/16 LG	12-162002-05	2		D
47		SCREW, PAN HD, 2-56 x 1 1/4 LG	12-162002-22	2		E
46		SCREW, PAN HD, 2-56 x 5/16 LG	12-162002-05	2		A

2 LIST OF MATERIALS 2703

UNLESS OTHERWISE SPECIFIED DIMENSIONS ARE IN INCHES
DECIMALS: 1PL ± .1 2PL ± .02 3PL ± .005 FRAC ± 1/64
ANG ± 1° SURFACE FINISH
MATERIAL
SPEC NO
FINISH

CONTRACT NUMBER
DR
CHK
APPD
APPD
DESIGN ACTIVITY APPROVAL
CUSTOMER APPROVAL

varian
MICROWAVE EQUIPMENT DIVISION
SANTA CLARA, CALIFORNIA

TWTA FINAL ASSEMBLY VZM-6990K1 SERIES 1

SIZE D | CODE IDENT NO 59782 | 01000592 | K
SCALE — | CLASS A | SHEET 2 OF 2

SUPERSEDES

01000592

REVISIONS					
ZONE	LTR	DESCRIPTION	EO	DATE	APPROVED
	A	INC EO	15888	4 4 82	
	B	INC ECO	27843	3/4/87	KCK

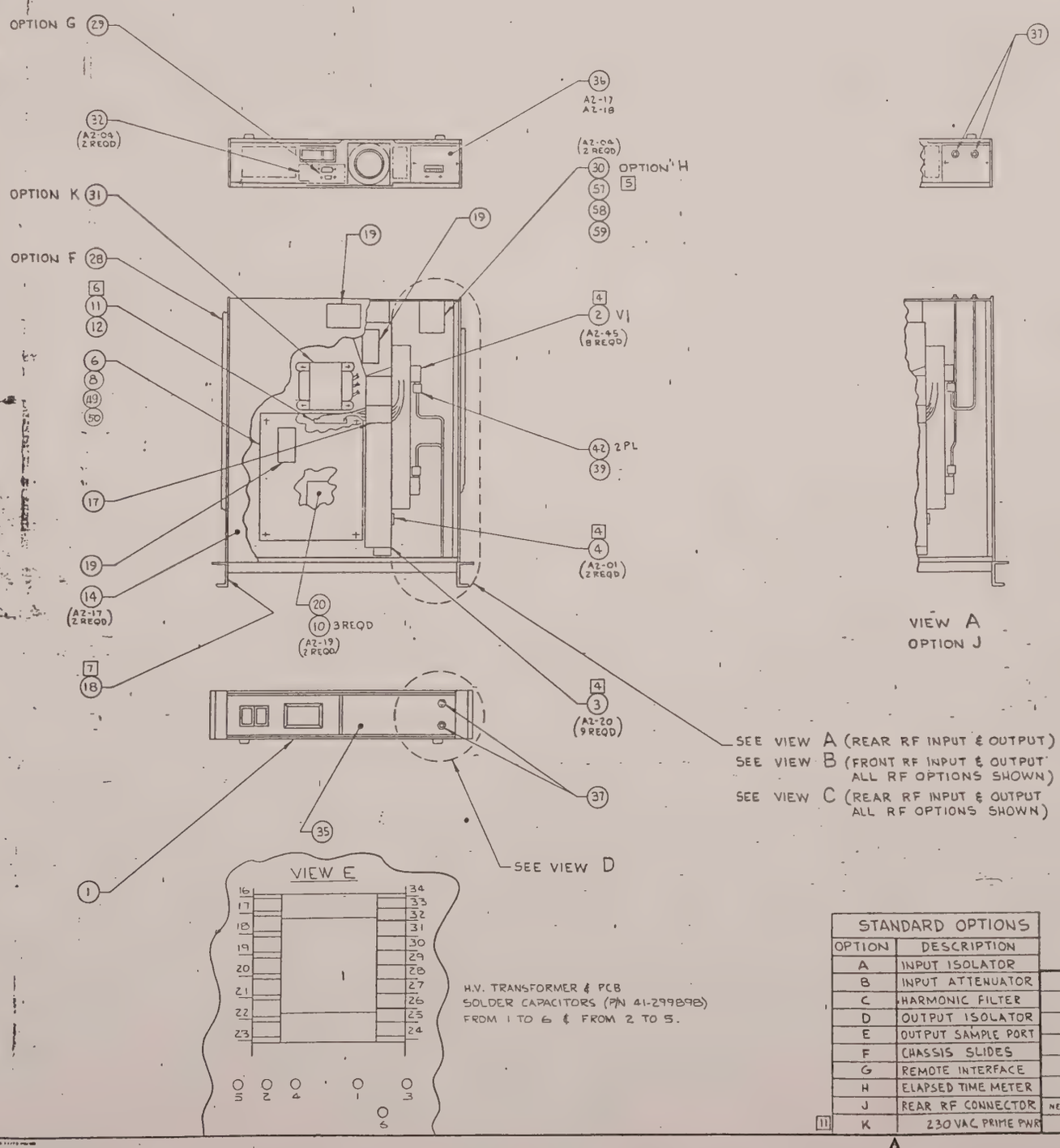

H.V. TRANSFORMER & PCB SOLDER CAPACITORS (P/N 41-299898) FROM 1 TO 6 & FROM 2 TO 5.

STANDARD OPTIONS	
OPTION	DESCRIPTION
A	INPUT ISOLATOR
B	INPUT ATTENUATOR
C	HARMONIC FILTER
D	OUTPUT ISOLATOR
E	OUTPUT SAMPLE PORT
F	CHASSIS SLIDES
G	REMOTE INTERFACE
H	ELAPSED TIME METER
J	REAR RF CONNECTOR
[11] K	230 VAC PRIME PWR

NEXT ASSEMBLY | USED ON | APPLICATION

LIST OF MATERIALS CONTINUED ON SHEET 2

[2] OPTIONS	SEE VIEW E	QTY WITH OPTION	QTY ALL MODELS	IDENTIFYING NUMBER	DESCRIPTION	CODE IDENT	ITEM
			REF	D135223-00	OUTLINE		45
			REF	C01001000	TWTA MODEL NUMBER BREAKDOWN		44
			1	01000420-00	SHIP KIT		43
			2	58-180150	CONNECTOR, PLUG, TNC		42
							41
D,E,E		1		58-180102	ADAPTER, SMA, PLUG TO PLUG		40
		AR	AR	82-299901	CABLE, SEMI-RIGID, .141		39
		AR		58-180100	CONNECTOR, PLUG, SMA		38
			2	58-180179	CONNECTOR, BULKHEAD JACK, TYPE 'N'		37
H,J			1	SEE TABLE 2	PLATE, REAR		36
B,E,J			1	SEE TABLE 1	PANEL, FRONT, RIGHT		35
							34
B			1	81-831001	90° BEND W/ SMA .141 CABLE		33
			1 [9]	B01000133-00	COVER PLATE		32
K		1	-	B01000443-01	230 OPTION KIT		31
H		1 [5]		76-789814	INDICATOR, ELAPSED TIME, 115V, 50HZ		30
				76-789815	INDICATOR, ELAPSED TIME, 115V, 60HZ		
G		1		C01000444-00	REMOTE CONTROL OPTION KIT		29
F		1PR		21-301120	SLIDE, ZERO #C-300-5-20		28
E		-1		83-330003 OR 330037	DIRECTIONAL COUPLER		27
		1		58-180179	CONNECTOR, BULKHEAD JACK, TYPE 'N'		26
D		1		A057648-03	ISOLATOR, OUTPUT		25
C		1		83-460010	HARMONIC FILTER		24
B		1		23-508002	KNOB		23
		1		83-439970	ATTENUATOR, VARIABLE		22
A		1		83-469856	ISOLATOR, INPUT		21
			1	D135199-00	ASSY, ANODE SUPPLY		20
			3	B112379-00	LABEL, DANGER		19
			1	A01000500	LABEL		18
			1	A01000503	CHANNEL, WIRING		17
			AR	88-298900	THERMAL COMPOUND		16
							15
			1	C135207-00	COVER, MODIFIED		14
							13
			5	51-407110	CONNECTOR SOCKET MOLEX #08-50-0106		12
			1	51-411032	CONNECTOR, 14 SOC, MOLEX #09-50-3141		11
			3	C135187-02	STAND-OFF		10
							9
			1	C135187-03	STAND-OFF		8
							7
			1	C135186-00	COVER, HIGH VOLTAGE		6
							5
			1	71-629899	SWITCH, THERMOSTATIC		4
			1	D135202-00	HEATSINK		3
			1	01000607	TWT, 4-8 GHZ		2
			1	E135216-00	ASSY, POWER SUPPLY		1

LIST OF MATERIALS 4795

UNLESS OTHERWISE SPECIFIED DIMENSIONS ARE IN INCHES
DECIMALS .1PL ± .1 .2PL ± .02
3PL ± .005 FRAC ± 1/64
ANG ± 1° SURFACE FINISH ✓
MATERIAL
SPEC NO
FINISH

CONTRACT NUMBER
DR E Fung 21SEPT81
CHK JR 9-23-81
APPD B Cho 9/22/81
APPD June Orindo 1/11/81
DESIGN ACTIVITY APPROVAL
CUSTOMER APPROVAL

varian — MICROWAVE EQUIPMENT OPERATIONS, SANTA CLARA CALIFORNIA

TWTA FINAL ASSEMBLY VZC-6961K3 SERIES [1]

SIZE D | CODE IDENT NO 59782 | 01000608 | B
SCALE — | CLASS A | SHEET 1 OF 2
SUPERSEDES

01000608

NOTES:

1. IF THE LAST FOUR DIGITS OF THE MODEL NO. ARE NUMERICALLY CODED (ie 6961K3XXXX) THE MODEL IS NOT COVERED IN THIS DRAWING. SEE DRAWING 01000XXX
2. INSTALL OPTIONS ACCORDING TO TWTA MODEL NO. EXAMPLE, IF TWTA MODEL NO. IS 6961K3ACEG OPTIONS ARE A, C, E AND G. SEE RF SCHEMATIC DIAGRAM FOR ASSEMBLIES OF OPTIONS A B C D E E
3. STANDARD HARDWARE PER C110625, EXAMPLE (A2-18 2 REQD)
4. APPLY A UNIFORM THIN COATING OF THERMAL COMPOUND ITEM 16 BETWEEN MOUNTING SURFACES OF ITEMS 2, 3 AND 4.
5. SELECT EITHER 50HZ OR 60HZ ELAPSED TIME INDICATOR ITEM 30 AS SPECIFIED ON CUSTOMER ORDER. CONNECT ITEM 30 TO TB1-3 AND TB1-2 USING ITEMS. 57, 58 AND 59.
6. CONNECT TWT ITEM 2, TO CONNECTOR ITEM 11 WITH CONNECTOR SOCKETS ITEM 12 PER A01000419.
7. NAME PLATE DATA

   TWTA: (USE MODEL NO. SPECIFIED ON CUSTOMER ORDER)

   FREQ: 4.0 - 8.0 GHz

   GAIN: REFER TO K-SERIES RF PERFORMANCE SPEC. (A01000818) FOR GAIN OF EACH TWTA.
8. ———
9. IF OPTION G IS REQUIRED DELETE ITEM 32.
10. INSTALL REQUIRED OPTIONS IN THE APPROXIMATE PLACE AS SHOWN AND CONNECT RF COMPONENTS IN ORDER SHOWN ON RF SCHEMATIC DIAGRAM.
11. SEE SHIPKIT FOR CUSTOMER INTERFACE OF PRIME POWER.

FRONT PANEL TABLE 1			
PART NO.	B OPTION	E OPTION	J OPTION
D01000417-12			
D01000417-15		X	
D01000417-13	X		
D01000417-17	X	X	
D01000417-00			X
D01000417-02		X	X
D01000417-03	X		X
D01000417-05	X	X	X

REAR PLATE TABLE 2		
PART NO	H OPTION	J OPTION
C01000418-00		
C01000418-01	X	
C01000418-03		X
C01000418-05	X	X

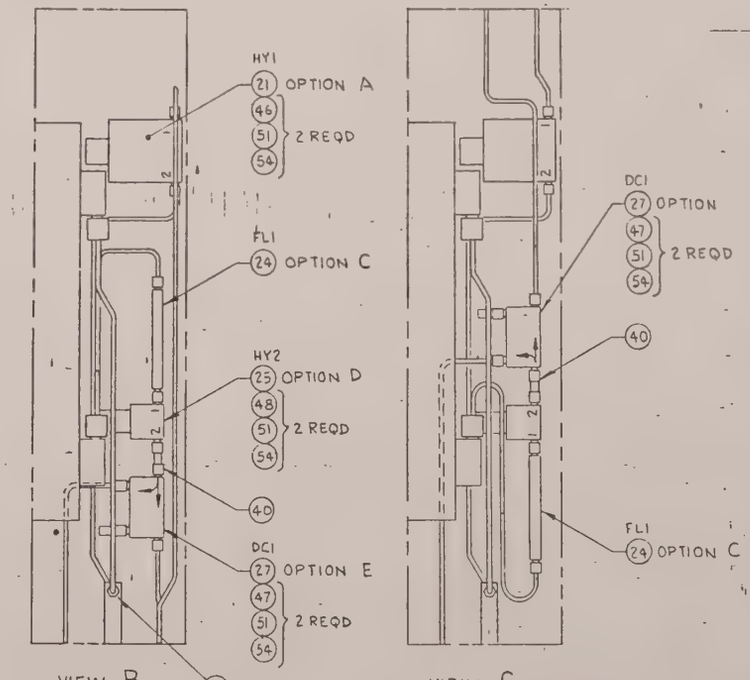

VIEW B
SCALE: NONE
FRONT RF INPUT & OUTPUT
ALL RF OPTIONS SHOWN

VIEW C
SCALE: NONE
REAR RF INPUT & OUTPUT
ALL RF OPTIONS SHOWN

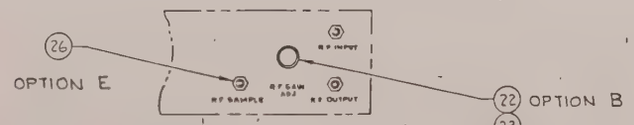

VIEW D
SCALE: NONE

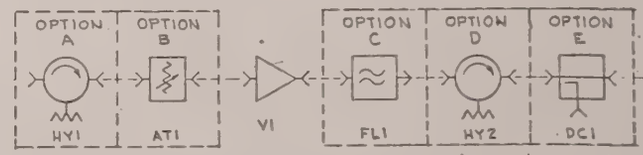

RF SCHEMATIC DIAGRAM
(ADD OPTIONS AS SPECIFIED IN ORDER SHOWN ABOVE)

2 OPTIONS	QTY WITH OPTION	QTY ALL MODELS	IDENTIFYING NUMBER	DESCRIPTION	CODE IDENT	ITEM
						67
						66
						65
						64
						63
						62
						61
						60
H	AR		81-288700	WIRE, TYPE EE, 24AWG, BLACK		59
	AR		88-468001	SHRINK TUBING 1/8 DIA		58
	2		15-999902	TERMINAL, QUICK DISCONNECT		57
						56
						55
A,E,D	AR		14-202002	WASHER, LOCK, #2		54
						53
A,E,D	AR		14-122002	WASHER, FLAT, #2		51
		4	14-301106	LOCK WASHER, INTERNAL, #6		50
		4	13-222006-07	SCREW, PAN HD, 6-32 x 7/16 LG.		49
D	2		12-162002-05	SCREW, PAN HD, 2-56 x 5/16 LG		48
E	2		12-162002-22	SCREW, PAN HD, 2-56 x 1 1/8 LG		47
A	2		12-162002-05	SCREW, PAN HD, 2-56 x 5/16 LG		46

LIST OF MATERIALS

UNLESS OTHERWISE SPECIFIED DIMENSIONS ARE IN INCHES
DECIMALS: 1PL ± .1 2PL ± .02
3PL ± .005 FRAC ± 1/64
ANG ± 1° SURFACE FINISH
MATERIAL
SPEC NO.
FINISH

CONTRACT NUMBER
DR
CHK
APPD
APPR
DESIGN ACTIVITY APPROVAL
CUSTOMER APPROVAL

varian — MICROWAVE EQUIPMENT OPERATIONS, SANTA CLARA, CALIFORNIA

TWTA FINAL ASSEMBLY VZC-6961K3 SERIES [1]

SIZE D | CODE IDENT NO. 59782 | 01000608 | B
SCALE — | SHEET 2 OF 2
SUPERSEDES

REVISIONS					
ZONE	LTR	DESCRIPTION	EO	DATE	APPROVED

01000608 D

REV	DESCRIPTION		
A	MFG RELEASE, CLASS A	22162	10-31-84

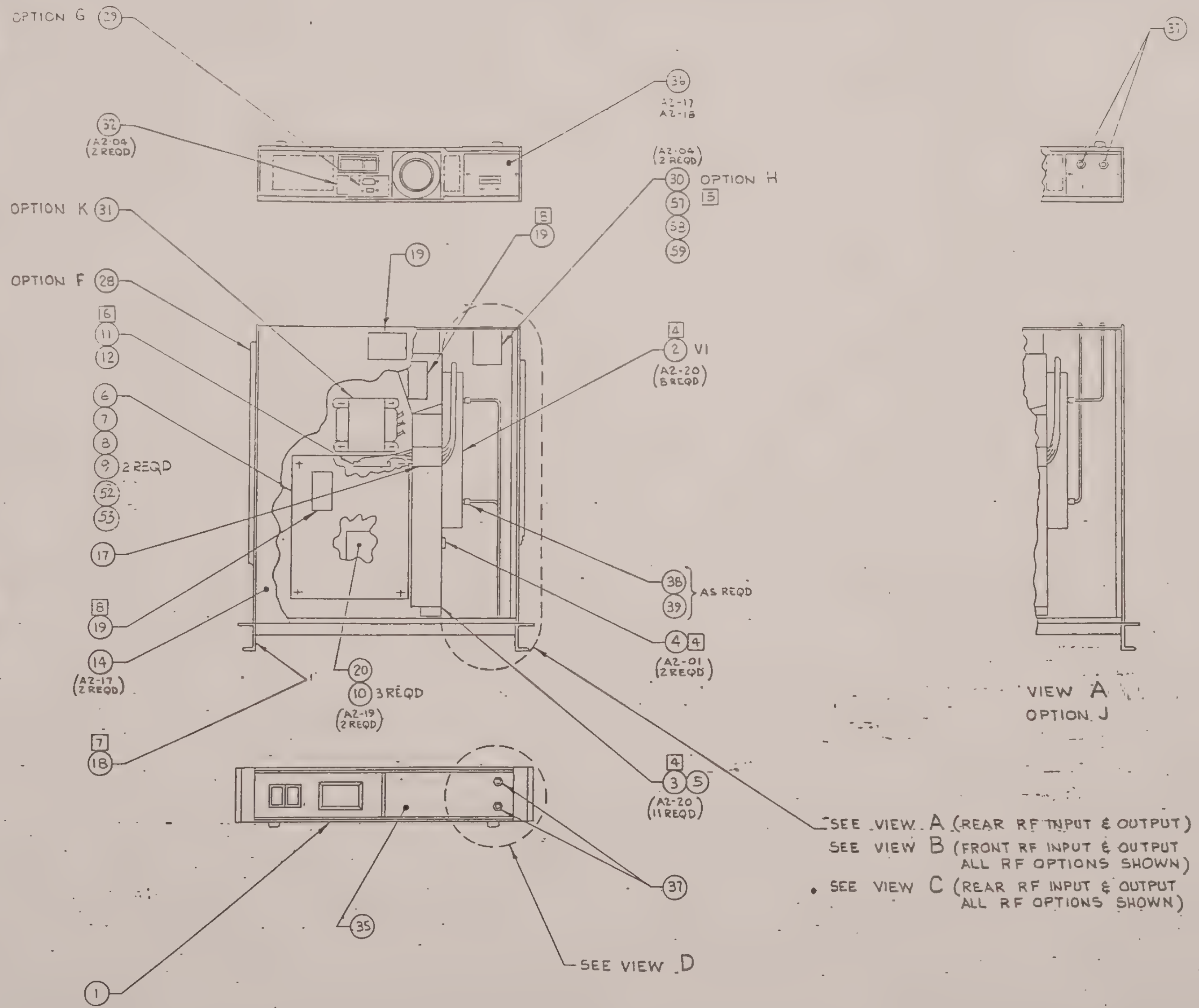

LIST OF MATERIALS CONTINUED ON SHEET 2

OPTIONS [2]	QTY WITH OPTION	QTY ALL MODELS	IDENTIFYING NUMBER	DESCRIPTION	CODE IDENT	ITEM
	1	REF	D135223-00	OUTLINE		45
		REF	C01001000	TWTA MODEL NUMBER BREAKDOWN		44
		1	SEE TABLE 3	SHIP KIT		43
						42
						41
D E E	1		58-180102	ADAPTER, SMA, PLUG TO PLUG		40
	AR	AR	82-299901	CABLE, SEMI-RIGID. .141		39
	AR	2	58-180100	CONNECTOR, PLUG, SMA		38
		2	58-180105	CONNECTOR, BULKHEAD JACK, SMA		37
H, J		1	SEE TABLE 2	PLATE, REAR		36
B, E, J		1	SEE TABLE 1	PANEL, FRONT, RIGHT		35
						34
						33
		1 [9]	B01000133-00	COVER PLATE		32
K	1		B01000443-00	115/230 OPTION. KIT		31
H	1 [5]		76-789814	INDICATOR, ELAPSED TIME, 115V, 50HZ		30
			76-789815	INDICATOR, ELAPSED TIME, 115V, 60HZ		
G	1		C01000444-00	REMOTE CONTROL OPTION KIT		29
F	1PR		21-301120	SLIDE, ZERO # C-300-S-20		28
E	1		83-330042	DIRECTIONAL COUPLER		27
	1		58-180105	CONNECTOR, BULKHEAD JACK, SMA		26
D	1		A057648-07	ISOLATOR, OUTPUT		25
C	1		83-460014	HARMONIC FILTER		24
B	1		23-508002	KNOB		23
	1		83-439946	ATTENUATOR, VARIABLE		22
A	1		83-469859	ISOLATOR, INPUT		21
		1	D135195-00	ASSY, GRID SUPPLY / REGULATOR		20
		3	B112379-00	LABEL, DANGER		19
		1	01000500	LABEL		18
		1	A01000503	CHANNEL WIRING		17
		AR	88-298900	THERMAL COMPOUND		16
						15
		1	C135207-00	COVER, MODIFIED		14
						13
		5	51-407110	CONNECTOR SOCKET MOLEX # 08-50-0106		12
		1	51-411032	CONNECTOR, 14 SOC, MOLEX # 09-50-3141		11
		3	C135187-02	STAND-OFF		10
		2	C135187-04	STAND-OFF		9
		1	C135187-03	STAND-OFF		8
		1	C135187-00	STAND-OFF		7
		1	C135186-00	COVER, HIGH VOLTAGE		6
		1	A01000948	BRACKET		5
		1	71-629971	SWITCH, THERMOSTATIC		4
		1	01000528	TWT MOUNTING BRACKET		3
		1	VTU 6090H1	TWT		2
		1	01000527	ASSY, POWER SUPPLY		1

LIST OF MATERIALS

STANDARD OPTIONS

OPTION	DESCRIPTION
A	INPUT ISOLATOR
B	INPUT ATTENUATOR
C	HARMONIC FILTER
D	OUTPUT ISOLATOR
E	OUTPUT SAMPLE PORT
F	CHASSIS SLIDES
G	REMOTE INTERFACE
H	ELAPSED TIME METER
J	REAR RF CONNECTOR

UNLESS OTHERWISE SPECIFIED DIMENSIONS ARE IN INCHES

DECIMALS: 1PL ± .1 2PL ± .02 3PL ± .005 FRAC ± 1/64 ANG ± 1°

SURFACE FINISH ✓

MATERIAL

CONTRACT NUMBER

DR	R. JIMENEZ	10-30-84
CHK	[signature]	10-30-84
APPD	[signature]	10-30-84
APPD	[signature]	11-2-84

DESIGN ACTIVITY APPROVAL

varian — MICROWAVE EQUIPMENT OPERATIONS SANTA CLARA, CALIFORNIA

TWTA FINAL ASSEMBLY
VZU-6998K2 SERIES [1]

SIZE	CODE IDENT NO		
D	59782	01005817	A

CLASS A 1 2

01005817

NOTES:

1. IF THE LAST FOUR DIGITS OF THE MODEL NO. ARE NUMERICALLY CODED (ie 6998K11234) THE MODEL IS NOT COVERED IN THIS DRAWING. SEE DRAWING 01001234.
2. INSTALL OPTIONS ACCORDING TO TWTA MODEL NO. EXAMPLE, IF TWTA MODEL NO. IS 6998K1ACEG OPTIONS ARE A, C, E AND G SEE RF SCHEMATIC DIAGRAM FOR ASSEMBLIES OF OPTIONS A B C D & E
3. STANDARD HARDWARE PER C110625, EXAMPLE (A2-18 (2 REQD))
4. APPLY A UNIFORM THIN COATING OF THERMAL COMPOUND ITEM 16 BETWEEN MOUNTING SURFACES OF ITEMS 2, 3 AND 4.
5. SELECT EITHER 50HZ OR 60HZ ELAPSED TIME INDICATOR ITEM 30 AS SPECIFIED ON CUSTOMER ORDER. CONNECT ITEM 30 TO TB1-3 AND TB1-2 USING ITEMS 57, 58 AND 59.
6. CONNECT TWT ITEM 2 TO CONNECTOR ITEM 11 WITH CONNECTOR SOCKETS ITEM 12 PER A01000419.
7. NAME PLATE DATA

   TWTA: (USE MODEL NO. SPECIFIED ON CUSTOMER ORDER)

   FREQ: 12.4 - 18.0 GHz

   GAIN: REFER TO K-SERIES RF PERFORMANCE SPEC. (A01000818) FOR GAIN OF EACH TWTA.
8. REMOVE PORTION OF LABEL THAT READS "EXPOSED WHEN COVER REMOVED".
9. IF OPTION G IS REQUIRED DELETE ITEM 32.
10. INSTALL REQUIRED OPTIONS IN THE APPROXIMATE PLACE AS SHOWN AND CONNECT RF COMPONENTS IN ORDER SHOWN ON RF SCHEMATIC DIAGRAM.
11. SEE SHIPKIT FOR CUSTOMER INTERFACE OF PRIME POWER.

FRONT PANEL TABLE 1			
PART NO.	B OPTION	E OPTION	J OPTION
D01000417-06			
D01000417-08		X	
D01000417-07	X		
D01000417-10	X	X	
D01000417-00			X
D01000417-01		X	X
D01000417-03	X		X
D01000417-04	X	X	X

REAR PLATE TABLE 2		
PART NO.	H OPTION	J OPTION
C01000418-00		
C01000418-01	X	
C01000418-02		X
C01000418-04	X	X

SHIP KIT TABLE 3		
PART NO.	G OPTION	K OPTION
B01000420-00		
B01000420-01		X
B01000420-02	X	
B01000420-03	X	X

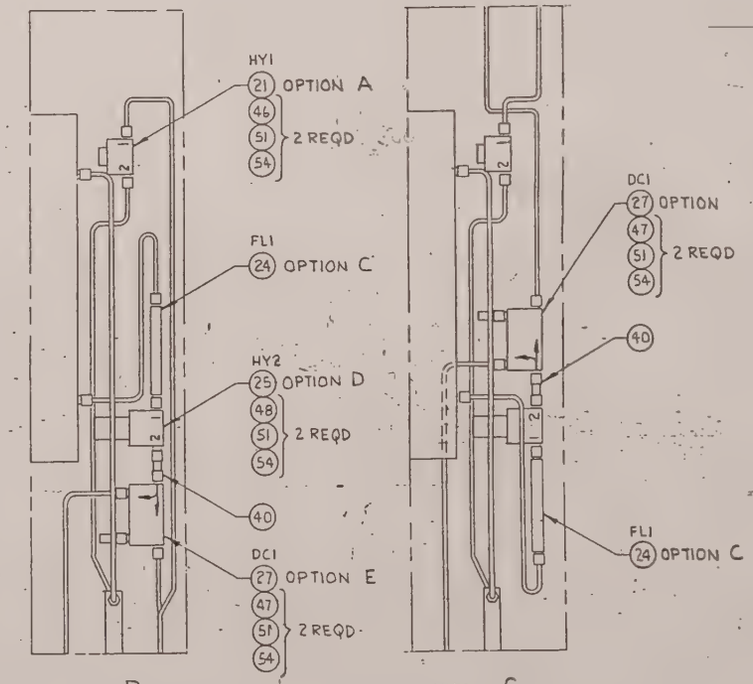

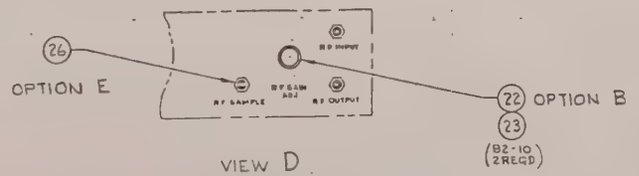

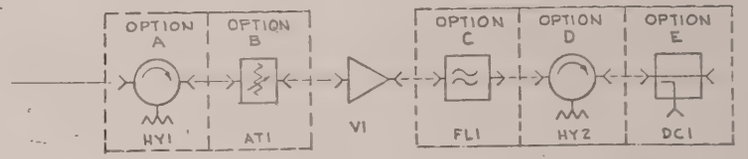

RF SCHEMATIC DIAGRAM
(ADD OPTIONS AS SPECIFIED IN ORDER SHOWN ABOVE)

ITEM	CODE IDENT	DESCRIPTION	IDENTIFYING NUMBER	QTY ALL MODELS	QTY WITH OPTION	OPTIONS
67						
66						
65						
64						
63						
62						
61						
60						
59		WIRE, TYPE EE, 24AWG, BLACK	81-288700		AR	H
58		SHRINK TUBING 1/8 DIA	88-488001		AR	H
57		TERMINAL, QUICK DISCONNECT	15-999902		2	H
56						
55						
54		WASHER, LOCK, #2	14-202002		AR	A,E,D
53		PAN HD SCREW #6	12-222006-07	4		
52		INT. LOCK WASHER	14-301106	4		
51		WASHER, FLAT, #2	14-122002		AR	A,E,D
50						
49						
48		SCREW, PAN HD, 2-56 x 5/16 LG	12-162002-05		2	D
47		SCREW, PAN HD, 2-56 x 1 1/4 LG	12-162002-22		2	E
46		SCREW, PAN HD, 2-56 x 5/16 LG	12-162002-05		2	A

2 LIST OF MATERIALS R7.3

UNLESS OTHERWISE SPECIFIED DIMENSIONS ARE IN INCHES
DECIMALS: 1PL ± .1 2PL ± .02
3PL ± .005 FRAC ± 1/64
ANG ± 1° SURFACE FINISH ✓
MATERIAL
SPEC NO
FINISH

CONTRACT NUMBER
DR
CHK
APPD
APPD
DESIGN ACTIVITY APPROVAL
CUSTOMER APPROVAL

varian — MICROWAVE EQUIPMENT OPERATIONS SANTA CLARA CALIFORNIA

TWTA
FINAL ASSEMBLY
VZU6998K2 SERIES 1

SIZE	CODE IDENT NO	
D	59782	01005817 A

SCALE — SHEET 2 OF 2

SUPERSEDES

01005817 D

www.manualsplus.com
1035181